GROWATT

MOD 3-10KTL3-XH/MOD 10KTL3-XH BE
Quick Guide

1. Overview

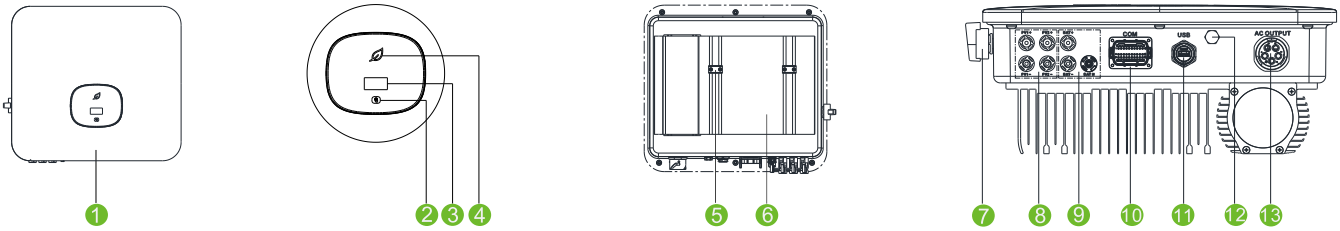

(1) Front panel	(2) Touch button	(3) LCD screen	(4) LED indicator	(5) Mounting bracket
(6) Heat sink	(7) DC switch	(8) PV terminal	(9) Battery terminal	(10) COM port
(11) USB port	(12) Vent valve	(13) AC terminal		

⚠ Note:

1. This document is for quick installation guidance only, please refer to User Manual for more details.
2. Growatt shall not be liable for any damage resulting from unproper installation.

2. Installation

System overview

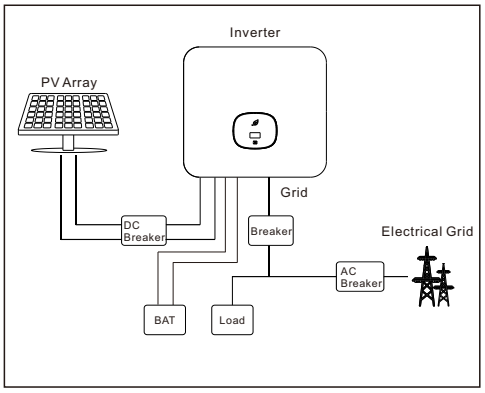

2.1 Installation requirements

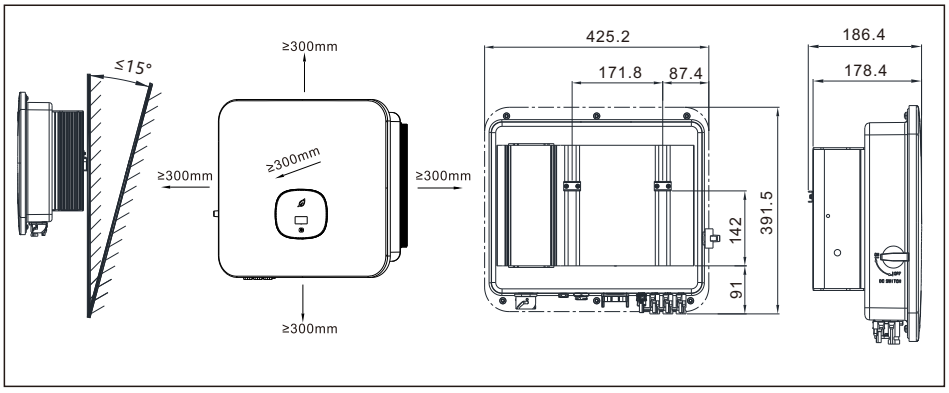

2.2 Wall mounting

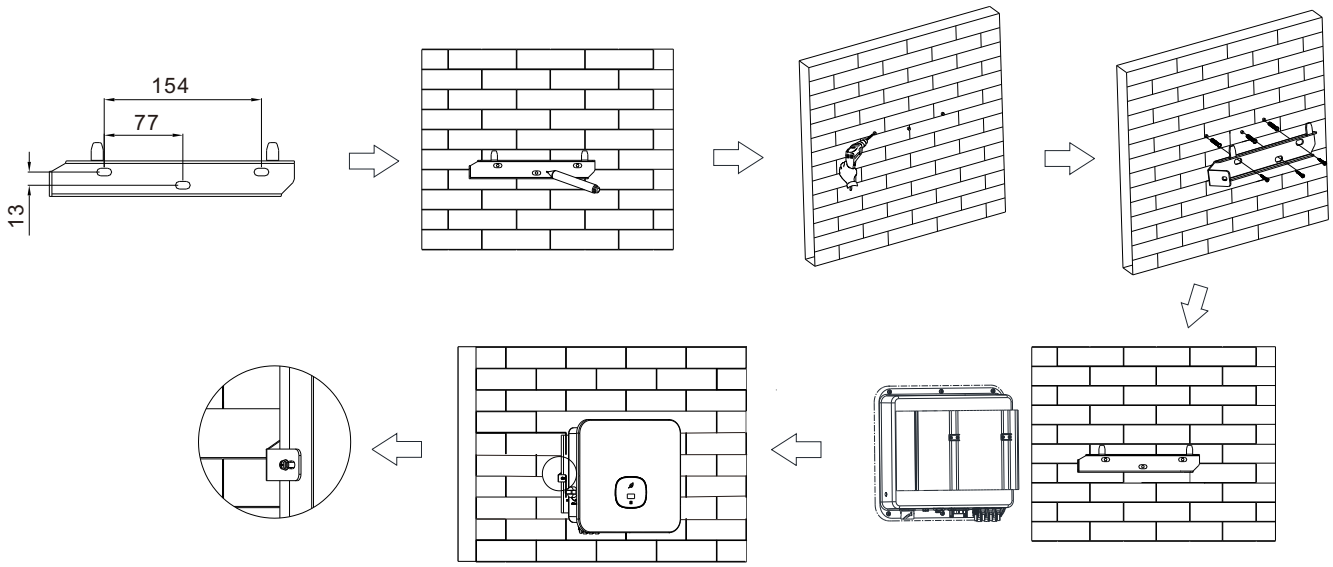

⚠ Note:

1. When drilling holes in the wall, avoid water and electricity pipes, otherwise it may cause danger.

2.3 Communication module installation

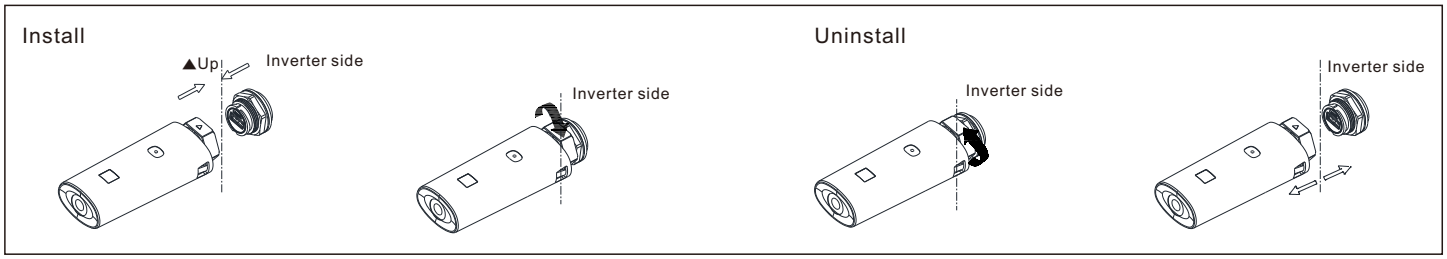

3. Electrical connection

Please prepare the cable before connecting as follows.

No.	Cable name	Type	Recommend model
1	Protective vgrounding wire	Single multi-core yellow-green wire	6mm²-10mm²
2	AC output wire	Two or three polychromatic multi-core copper wires	6mm²-10mm²
3	PV input wire	PV wire	4mm²-6mm²
4	Battery input wire	Battery wire	4mm²-6mm²
5	Communication wire	RS485	/

⚠ Note:

1.Please make sure all switches are in "OFF" position before wiring. For personal safety, please do not operate with electricity.
2.If the diameter of the cable does not match the terminal, or the cable is aluminum wire, please contact our after-sales personnel.

3.1 Grounding

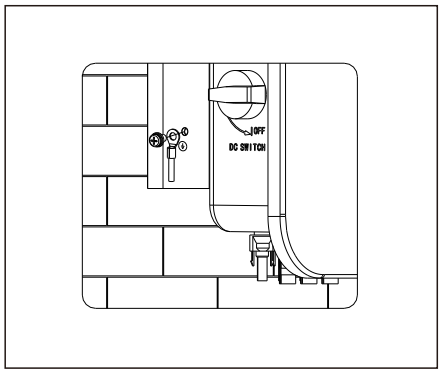

3.2 AC output connection

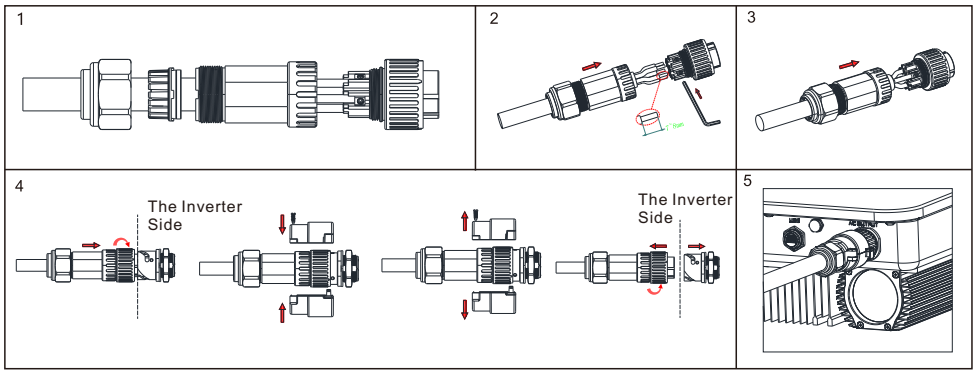

3.3 DC connection

3.3.1 PV/Battery input terminal installation

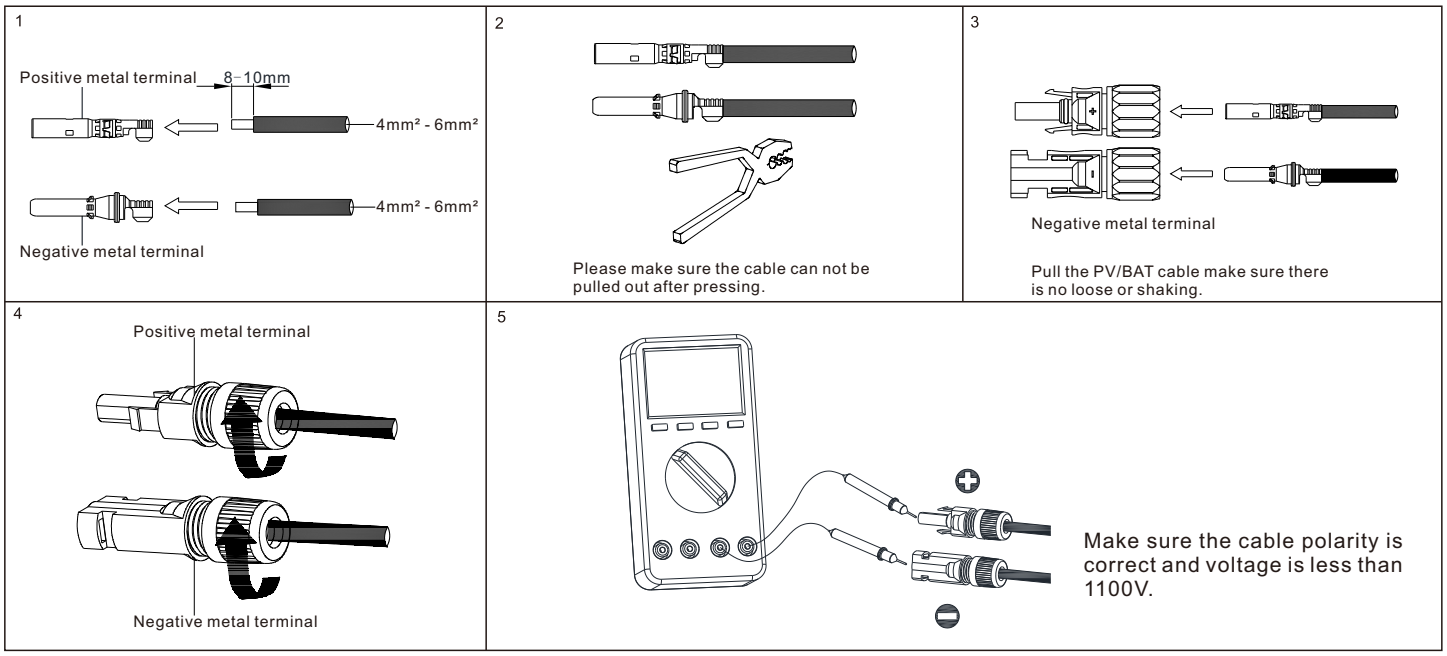

3.3.2 Plug in PV/BAT terminal

1

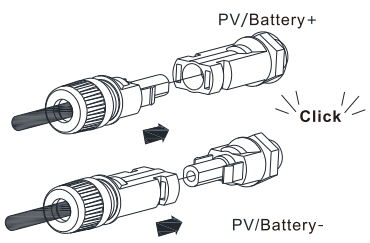

2

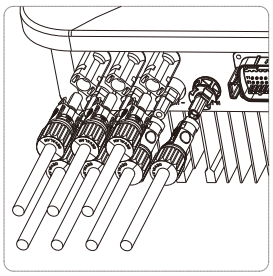

⚠Note:

1. Before installing the PV terminal, please double-check that the PV input voltage and current do not exceed the MPPT limits.
2. When installing the PV terminal, pay attention to the difference between the positive and negative poles and the one-to-one correspondence between the terminals and the machine.
3. There is a "click" sound when the terminal is connected,please gently pulling the PV wire to make sure there is no loose or pulling off.

3.3.3 Communication cable installation

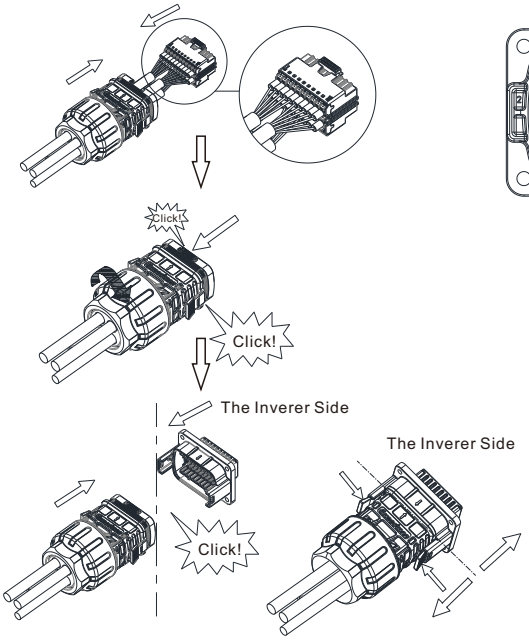

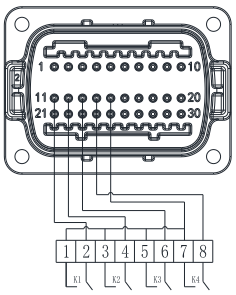

connect
to RRCR

No.	RRCR Description	Active Power
11	K1-out	0%
12	K2-out	30%
13	K3-out	60%
14	K4-out	100%
15	Relays common node	/
16	/	/

No.	Description	Remarks
1	+12V	Dry junction : external relay coil interface, power is not more than 2W
2	COM	
3	RS485A1	RS485 communication port
4	RS485B1	
5	RS485A3	Meter communication port
6	RS485B3	
7	RS485A2	Battery communication port
8	RS485B2	
9	BAT.EN+	Battery wake-up signal
10	BAT.EN-	
11	DRM1/5	Relay contact 1 input
12	DRM2/6	Relay contact 2 input
13	DRM3/7	Relay contact 3 input
14	DRM4/8	Relay contact 4 input
15	REF/GEN	GND
16	DRM0/COM	/
17	RS485A4	Backup box communication
18	RS485B4	
21	BOX.EN+	Backup box identification signal
22	BOX.EN-	

⚠Note:

When connecting the communication line,port 15 and 16 are not connected,as for the other function, please refer to the above table according to the customer needs.

4. Connecting Meter and Backup Box

The following table describes how we can connect EASTRON meter (TPM-E) and Backup Box to inverter:

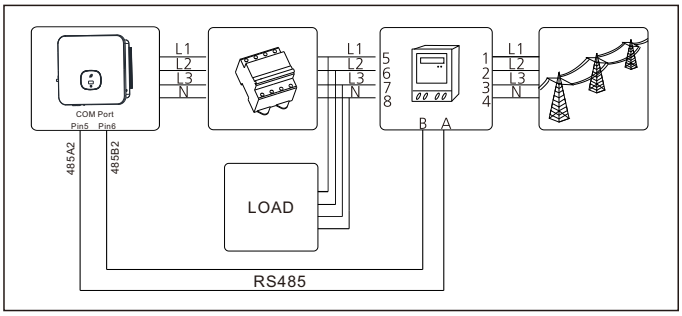

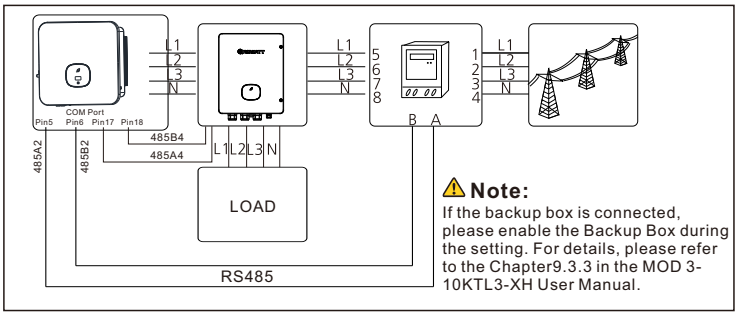

⚠Note:

If the backup box is connected, please enable the Backup Box during the setting. For details, please refer to the Chapter9.3.3 in the MOD 3-10KTL3-XH User Manual.

5. Post-installation check

No.	Acceptance criteria	No.	Acceptance criteria
1	The inverter is installed correctly, firmly and reliably.	6	The RS485 communication cable is installed correctly and firmly.
2	The ground wire connected well and the connection is firm and reliable.	7	The cable tie port is trimmed well without leaving sharp corners,meets the requirements of the user.
3	All switches are in the OFF state.	8	All exposed terminals are well protected and there are no vacant ports.
4	All wiring is correct and securely connected.	9	Pay attention to clean up all construction residues.
5	The wiring of the cable is reasonable, meets the requirements, and there is no phenomenon of broken skin.		

6. Power on and off steps

⚠**Note:**
Before turning the inverter on, please make sure the PV input voltage and current are within the MPPT limits.
Follow the steps below to turn the inverter on:
1.Switch on the build-in DC isolator at the bottom of the inverter.
2.Switch on the PV Array and DC isolator next to your inverter, if you can not find this switch, skip this step.
3.Switch on the Solar AC isolator if the inverter is more than 3 meters away from your switchboard.
4.Switch on the solar supply main switch in the switch board.
To shut down your system, follow this guide in reverse order.

7. Status of PV grid inverter

Customer can read more information by push button.

Mark	Describe	Explain	
	Touch mark	Single touch	Switch the display interface or the current number plus 1
		Double touch	Enter the setting state or confirm
		Triple touch	Return to the previous display interface
		Long press for 5s	The current data returns to the default value
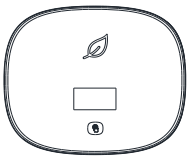	Inverter status indicator	Red	Fault
		Green	Normal operation
		Red light flashing	Warning
		It can display the basic information of inverter through LCD display screen (PV/AC voltage,PV power,AC current,total power,generating capacity, etc.).	

8. Export limitation setting

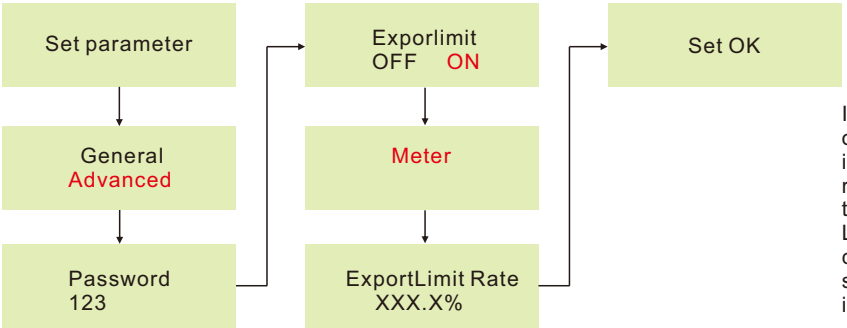

If the local grid company requires to limit the output power from your inverter systems,we introduce the concept of Export Limit Rate.The ratio of your system output power divided by the rated power of the inverter is called Export Limited Rate.For example,if the local grid companyonly accepts 4kW from your 5kW system,then the Export Limit Rate of 5kW inverter should be 80%.

9. Declaration of Conformity

This product complies with the following regulations and requirements:
Low Voltage Directive (LVD) 2014/35/EU
EMC Directive 2014/30/EU
RoHS Directive 2011/65/EU and its subsequent amendments & Directive (EU) 2015/863
You can download the Declaration of Conformity at: https://en.growatt.com.

10. Service and contact

Shenzhen Growatt New Energy Co., Ltd.

4-13/F, Building A, Sino-German (Europe) Industrial Park,
Hangcheng Blvd, Bao'an District, Shenzhen, China

E service@growatt.com
W en.growatt.com

For local customer support, please visit https://en.growatt.com/support/contact

Download Manual

Growatt New Energy

GR-UM-240-A-04 (PN:044.0094204)