GROWATT

MOD 3-10KTL3-XH

&

User Manual

Copyright © Shenzhen Growatt New Energy Co., Ltd. 2023. All rights reserved.
No part of this document may be reproduced, stored in a retrieval system or transmitted, in any form or by any means, be it electronic, mechanical, photographic, magnetic or otherwise, without the prior written permission of Shenzhen Growatt New Energy Co.,Ltd. (hereinafter referred to as Growatt).

Notice

All products, services and features are stipulated by the contract made between Growatt and the customer. All or part of the products, services and features described in this document may not fall under the scope of purchase or usage. Unless otherwise specified in the contract, Growatt makes no representations or warranties, express or implied with respect to this documentation.

The content of this document is continually reviewed and amended, where necessary. However, discrepancies cannot be excluded. Growatt reserves the right to make changes to the material at any time and without notice in order to keep the document accurate and up-to-date. For the latest documents, you can visit our official website, scan the QR code on the manual or reach out to your distributor.

Unless otherwise specified, this document is intended as an operation guide only. All statements, information, and recommendations in this document do not constitute a warranty of any kind, express or implied.

Information on this document

This document applies to the following inverter models:
MOD (3000/4000/5000/6000/7000/8000/9000/10K) TL3-XH (hereinafter referred to as MOD TL3-XH).
This document mainly describes the MOD-XH inverter mentioned above concerning its functions, installation, electrical connection, commissioning and maintenance. Prior to operating the inverter, read through this manual and familiarize yourself with all safety precautions and the features of the product.

The content of this document is continually reviewed and amended, where necessary. However, discrepancies cannot be excluded. Growatt reserves the right to make changes to the material at any time and without notice in order to keep the document accurate and up-to-date. For the latest documents, you can visit our official website, scan the QR code on the manual or reach out to your distributor. The parameters and images in this document are for reference only, and the actual product prevails.

This document is intended for photovoltaic (PV) plant operating personnel and qualified electricians.

Change history

Version 00

First release

Symbol convention

Symbols in this manual

The following safety symbols are used throughout this document to denote important safety information. Familiarize yourself with the symbols and their meaning before installing or operating this instrument.

Symbol	Meaning
DANGER	DANGER indicates a hazardous situation which, if not avoided, will result in death or serious injury.
WARNING	WARNING indicates a hazardous situation which, if not avoided, could result in death or serious injury.
CAUTION	CAUTION indicates a hazardous situation which, if not avoided, could result in minor or moderate injury.
NOTICE	NOTICE is used to address practices which are not safety relevant.
Information	Information that you must read and know to ensure optimal system operation.

Labels on this product

Symbol	Explanation
	Risk of high voltages which might lead to electric shocks
	Risk of fire
	Risk of burns due to hot surface
5min	Delayed discharge: High voltage exists after the battery is powered off. It takes 5 minutes to discharge to the safe voltage.
	Grounding: indicates the position for connecting the PE cable

	Direct Current (DC)
	Alternating Current (AC)
	Refer to the manual
	CE marking The inverter complies with the requirements of the applicable EU directives
	Do not dispose of the product together with the household waste but in accordance with the disposal regulations for electronic waste applicable at the installation site

Definition and interpretation

AC
Abbreviation for "Alternating Current"
DC
Abbreviation for "Direct Current"
PV
Abbreviation for photovoltaic
AFCI
AFCI stands for Arc Fault Circuit Interrupter. It is a protective device designed to protect against fire hazards caused by arc faults. The Arc Fault Circuit Interrupter can detect arcs in the circuit and break the supply of electrical power to the circuit.
GFCI
GFCI stands for Ground Fault Circuit Interrupter. It is a safety device for protection against line-to-ground faults. A GFCI offers protection to users of electrical equipment against possible fatal electric shock from faulty equipment or accidental grounding.
Energy
Energy is measured in units of Wh (watt-hour), kWh (kilowatt-hour) or MWh (megawatt-hour). It is a measure of power output over time (energy = power x time). For example, if the inverter operates at a constant power of 4600 W for 30 minutes and then at a constant power of 2300 W for another 30 minutes, it would have generated a total energy output of 3450 Wh in that hour.
Power
Power is measured in W (watts), kW (kilowatts) or MW (megawatts), describing the rate at which the electricity is being used at a specific moment.
Power rate
Power rate is the ratio of current power fed into the power distribution grid and the maximum power of the inverter that can be fed into the power distribution grid.
Power factor
Power factor is the ratio between real power (measured in watts) and apparent power (measured in Volt-Amps). When the current and voltage are in phase, the power factor is 1.0. In an AC circuit, the power is not always equal to the direct product of volts and amperes due to reactive components. In order to find the true power of a single-phase AC circuit, the product of volts and amperes must be multiplied by the power factor.

Table of contents

1 Safety 1

1.1 Safety precautions 1

1.1.1 For operation personnel 1

1.1.2 For electrical equipment 2

1.1.3 For equipment installation 2

2 Product overview 5

2.1 Introduction 5

2.2 Working principle 6

2.3 Operating status 6

2.4 Application scenarios 7

2.4.1 Grid-tied PV & ESS (Energy Storage System) 7

2.4.2 Partial backup 8

2.4.3 Whole-home backup 8

2.5 Operating mode 9

2.5.1 Load First mode 9

2.5.2 Battery First mode 10

2.5.3 Gird First mode 10

2.5.4 Backup mode 10

2.6 Functions 11

2.6.1 Touch button 11

2.6.2 LED indicator 11

2.6.3 OLED display 12

2.6.4 Export limitation 12

2.6.5 Demand Response Modes (DRMs) & Radio Ripple Control Receiver (RRCR) 13

2.6.6 Dry contact 13

2.6.7 AFCI (Arc Fault Circuit Interrupter) 13

2.6.8 GFCI (Ground Fault Circuit Interrupter) 13

2.6.9 Monitoring 14

3 Inspection upon delivery 15

3.1 Checking the packing list 15

3.2 Moving the inverter 16

3.3 Appearance 16

3.4 Dimensions and weight 17

3.4.1 Dimensions of the package 17

3.4.2 Dimensions and weight of the MOD inverter 17

3.5 Storing the inverter 17
4 Installation 18
4.1 Required tools 18
4.2 Installation requirements 18
4.2.1 Environment requirements 18
4.2.2 Carrier requirements 19
4.3 Wall-mounted installation 21
4.3.1 Installing the mounting bracket 21
4.3.2 Installing the inverter 22
5 Electrical connection 24
5.1 Safety precautions 24
5.2 Preparing cables 24
5.3 Preparing the AC breaker 25
5.4 Connecting the grounding cable 26
5.5 Connecting the AC output cable 27
5.6 Connecting the DC input cable 29
5.6.1 Connecting the PV terminal 30
5.7 Connecting the communication cable 31
5.7.1 COM port definition 31
5.7.2 Connecting the 30-pin COM connector 32
5.8 Connecting the battery (optional) 33
5.8.1 Connecting a single battery cluster 34
5.9 Connecting the meter (optional) 35
5.9.1 Connecting Growatt smart meter 36
5.9.2 Connecting Eastron smart meter 38
5.9.3 Connecting CHINT smart meter 40
5.10 Connecting the SYN BOX (optional) 42
5.11 Connecting the monitoring module 43
5.11.1 The monitoring module model 43
5.11.2 Configuring the SEM-X/ShineMaste-X 44
5.11.3 Installing and removing the datalogger 44
5.11.4 Configuring the datalogger 45
6 Human-machine interaction 46
6.1 OLED control 46
6.2 Setting the language 46
6.3 Setting the communication address 46
6.4 Setting the country/area 47

6.5 Enabling the meter 47
6.6 Setting the export limitation parameters 47
6.7 Setting the off-grid function 48
6.8 Setting the charge from grid function 49
6.9 Restoring to factory settings 49
7 Commissioning 50
7.1 Checking before powering on the system 50
7.2 Powering on the system 50
7.3 Setting the country/region 50
8 Functions 51
8.1 Setting the export limitation 51
8.1.1 On the OLED screen 51
8.1.2 On the ShinePhone APP 51
8.1.3 On the Server webpage 52
8.2 DRMs & Remote logic control 53
8.2.1 Demand Response Modes (for AU & NZ only) 53
8.2.2 Active power control with a RRCR (for EU models) 55
8.3 Setting the dry contact 56
8.3.1 On the Server webpage 56
8.3.2 On the ShinePhone APP 57
8.4 Setting the operating modes 58
8.4.1 On the Server webpage 58
8.4.2 On the ShinePhone APP 59
8.5 Backup function (optional) 60
8.5.1 Setting the off-grid function on the OLED screen 60
8.5.2 Setting the off-grid function on the Server webpage 60
8.5.3 Setting the off-grid function on the ShinePhone APP 61
8.6 AFCI 61
8.6.1 Enabling the AFCI function 61
8.6.2 Clearing the fault 63
8.7 Setting the COM address of the inverter 64
8.8 Power de-rating for voltage variation (Volt-Watt mode) 64
8.9 Reactive power regulation for voltage variation (Volt-VAR mode) 64
9 System maintenance 65
9.1 Powering off the system 65
9.2 Checking items and Maintenance frequency 65

10 Decommissioning 66
10.1 Removing the inverter 66
10.2 Packing the inverter 66
10.3 Storing the inverter 66
10.4 Disposing of the inverter 66
11 Specification 67
11.1 MOD TL3-XH series 67
11.2 MOD TL3-XH(BP) series 73
12 Troubleshooting 79
12.1 System alarm 79
12.1.1 Inverter alarm 79
12.1.2 Battery alarm 83
12.2 System fault 85
12.2.1 Inverter fault 85
12.2.2 Battery fault 90
13 EU Declaration of conformity 93
14 Certificate of Compliance 93
15 Contact us 94

1 Safety

Information	• Read this entire document before installing, operating and maintaining the product. Follow the instructions in this manual, note the safety symbols and observe all safety precautions.

Growatt shall not be held liable for any damage caused by the following circumstances:

- Use the product beyond the conditions specified in this manual or failure to meet the installation/environment requirements in accordance with applicable local and international standards.
- Device damage owing to force majeure, such as earthquakes, floods, volcanic eruptions, debris flows and lightning strikes.
- Failure to follow the operational instructions and safety warnings provided in the documentation.
- Unauthorized modifications to the product or the software code or disassembly of the product.
- Tools and materials prepared by the customer do not comply with local legislation and relevant standards.
- Damage caused by negligence of the customer or a third party, intentional breach, gross negligence and improper operations or damage not caused by Growatt.

1.1 Safety precautions

1.1.1 For operation personnel

- Only qualified technicians who have received professional training are permitted to install and operate the inverter. Installation personnel should read through this manual prior to installing the instrument.
- Non-professionals are not allowed to operate the equipment. Do not attempt to repair, modify or disassemble the inverter by yourself.

DANGER	• Do not work with power on; otherwise, it might lead to personal injury. • Do not wear conductive objects such as watches, bracelets, bangles, or rings during operation to avoid an electric shock. • Do not connect or disconnect power cables when the system is in operation as it may generate electric arcs and cause damage to the device. • Before performing routine maintenance, power off the system and wait 5 minutes for the capacitor to discharge to a safe level and to avoid body burns caused by the remaining heat.
WARNING	• Insulated tools must be used for all work on the system to avoid electric shocks. The dielectric withstanding voltage level must comply with local laws, regulations, standards and specifications. • Wear helmets, goggles, insulated gloves, reflective clothes and safety shoes during operation. • If a fault persists after restarting the system, please contact Growatt support. Tampering with or opening the inverter without authorization will void the warranty.

1.1.2 For electrical equipment

Information	• Check the equipment for damage before starting installation.
DANGER	• During installation, do not open the inverter without permission to prevent foreign objects from entering the device, which might cause short circuits. • The inverter must be properly grounded. • The air inlet and outlet of the fan must not be obstructed.

1.1.3 For equipment installation

1.1.3.1 Moving heavy objects

WARNING	• Be careful when moving the inverter with consideration of its weight. Carry the equipment with your palms, rather than your fingers. Be aware of personal injury caused by a falling inverter. • If multiple persons are required to move the heavy equipment, consider factors like height when determining the manpower and work division. Ensure that the weight is evenly distributed to maintain balance. • When moving the equipment manually, wear protective gears such as gloves, safety shoes and helmets to prevent injuries.
NOTICE	• When moving the inverter, avoid applying forces to DC switches, PV terminals, BAT terminals, or AC terminals. The consequential damage to terminals or switches will not be covered by any warranty. • When moving the inverter with a forklift, it is important to ensure that the inverter is centered on the forks and is secured with appropriate straps to prevent tip-overs.

1.1.3.2 Moving the MOD inverter

WARNING	• The MOD inverter weighs about 14 kg and one person is required for moving it to the installation site.

Figure 1-1 Moving the inverter

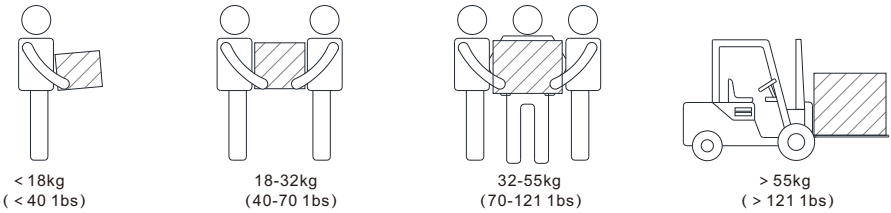

1.1.3.3 Using a ladder

WARNING	• Any work which is performed 2 meters or more is known as work at heights. Use a ladder when working at heights. If on-site conditions permit, use a double-hook safety belt when climbing the ladder to prevent falls. Do not attach the hooks to the ladder rung; instead, attach them to a solid structure that the ladder leans against. If the safety belt is not available, you are supposed to use a safety rope for fall protection. • The ladder base should be in good condition. Place the ladder on a level and solid working surface to prevent slipping and tilting.
NOTICE	• When you need to perform live working at heights, use a wooden or insulated ladder. Check whether the ladder is as per the standards before using it. Do not use a ladder with potential safety hazards. • When working at heights, use a platform ladder with guard rails rather than a straight ladder.

1.1.3.4 Hoisting the equipment

WARNING	• When hoisting the equipment, observe local hoisting standards closely.

1.1.3.5 Drilling holes

NOTICE	• When drilling holes, wear protective gears, such as goggles, masks, and protective gloves. • Avoid drilling holes into the water pipes and power cables to prevent short circuits or other hazards. • When drilling holes, protect the equipment from shavings. Remove shavings from holes in time. • After drilling, clean up any dust inside the hole.

1.1.3.6 Connecting cables

DANGER	• When exposed to light, the PV modules generate high DC voltage which is present in the DC cables. Ensure that the DC SWITCH on the inverter is set to OFF before connecting cables. • You are recommended to prepare firefighting equipment on site, such as fire sand and fire extinguishers. • Wear insulated gloves and use insulated tools to prevent electric shock injuries.

WARNING	• Follow the wiring instructions specified in the user manual; otherwise, any device damage caused by improper wiring will not be covered under any warranty. • Unqualified persons shall not perform any electrical connections. • Wear insulated gloves to prevent static electricity from damaging the components of the inverter. • Do not use single-strand wire as the output wire for the inverter. • Do not use aluminum wire as the output cable. • Avoid overstress on the cable, which could lead to poor contact.
NOTICE	• When assembling cables, please keep a distance from the inverter to prevent cable debris from falling into the inverter, which might cause short circuits. • Damage caused by dust or moisture penetration due to improper installation of waterproof connectors is beyond the scope of warranty.

2 Product overview

2.1 Introduction

Features

The MOD TL3-XH is a high-quality Hybrid Inverter designed to convert solar energy into AC energy or store energy in the battery. Energy output from the inverter can be used to optimize self-consumption, store in the battery for future use or feed into the public grid. Users are allowed to configure different operating modes based on the PV generation and their needs. During a power outage, it can discharge the battery and work in the off-grid mode to supply power.

Model description

MOD 10K TL3-XH
① ② ③④ ⑤

Table 2-1 Model description

Designation	Meaning	Description
①	Product series	MOD: Product series name
②	Power class	• 10K: the rated power is 10kW • 9000: the rated power is 9000W • 8000: the rated power is 8000W • 7000: the rated power is 7000W • 6000: the rated power is 6000W • 5000: the rated power is 5000W • 4000: the rated power is 4000W • 3000: the rated power is 3000W
③	Electronic architecture	TL: transformerless inverter
④	AC output	• /: single-phase • 3: three-phase
⑤	Feature	• X: PV Inverter • XH: Hybrid Inverter • XA: Storage Inverter

2.2 Working principle

The MOD 3-10KTL3-XH inverter features 2 independent MPPT (maximum power point tracking) channels. The inverter performs maximum power point tracking on the string inputs through the PV circuits and then converts the direct current (DC) to three-phase alternating current (AC) through the inverter circuit. It supports surge protection on the DC side and surge protection as well as ground fault protection on the AC side.

Figure 2-1 Schematic diagram

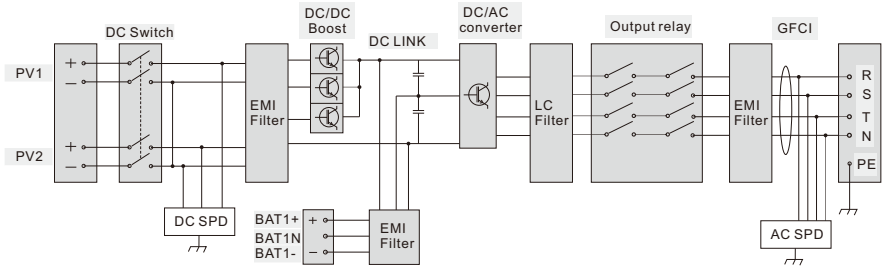

2.3 Operating status

There are four operating statuses of the MOD TL3-XH inverter: Standby, Normal, Fault and Update.

Figure 2-2 Operating mode

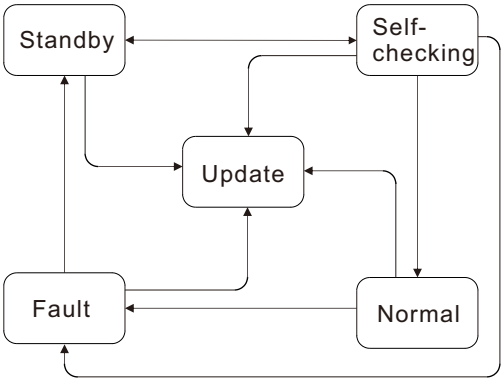

Table 2-2 Operating mode description

Operating status	Description
Standby	Receive a shutdown command or the PV voltage does not meet the requirement for grid connection
Self-checking	Conduct self-check to check if the grid connection requirements are met
Normal	Successfully connected to the grid or the inverter is working in the off-grid mode normally
Fault	A fault has occurred. The inverter exits the on-grid or off-grid output status
Update	Updating the firmware

2.4 Application scenarios

2.4.1 Grid-tied PV & ESS (Energy Storage System)

NOTICE	• The MOD TL3-XH inverter, when paired with batteries, offers the grid-tied "PV+ Energy Storage" solution. • In this application scenario, an external energy meter is required. The meter should be installed between the grid and the load. Failure to do so will render the configuration of different operating modes for the system ineffective.

Figure 2-3 PV + Energy Storage System

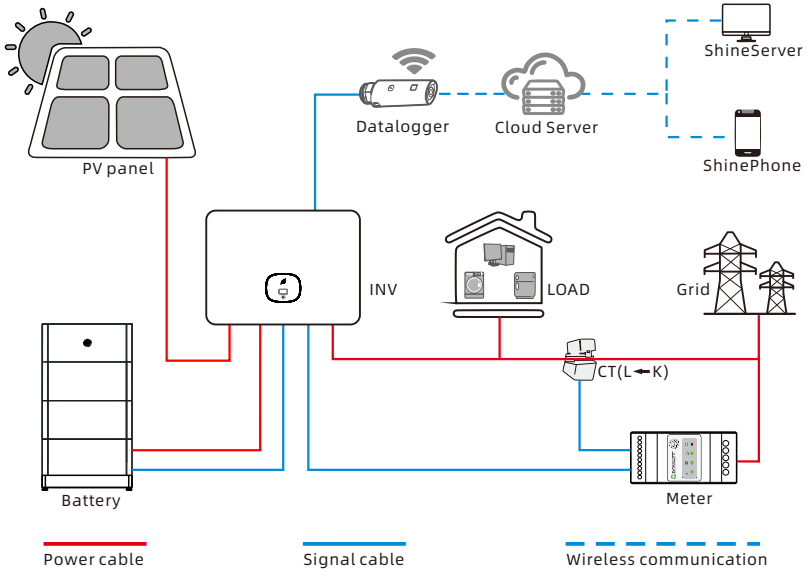

2.4.2 Partial backup

NOTICE	• Due to the power limitations of the battery and the inverter, not all the electrical appliances can be powered when the system goes off-grid. You can configure the partial back-up function with the essential loads connected to the LOAD port on the SYN BOX and other loads to the grid.

Figure 2-4 Partial backup system

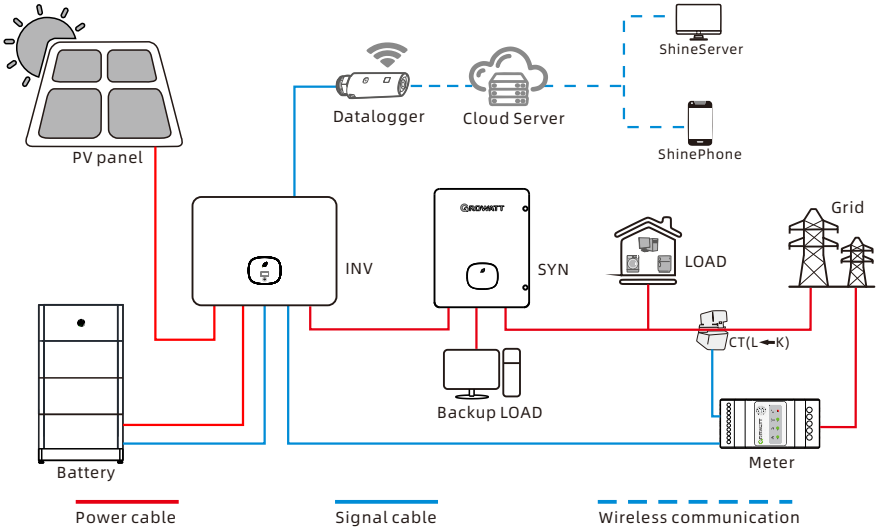

2.4.3 Whole-home backup

NOTICE	• When the maximum power output capacity of the system in the off-grid state surpasses the total power demand of the electrical appliances, you can configure the system for a whole-home backup setup. In this case, you can connect all loads to the LOAD port of the SYN BOX.

Figure 2-5 Whole-home backup system

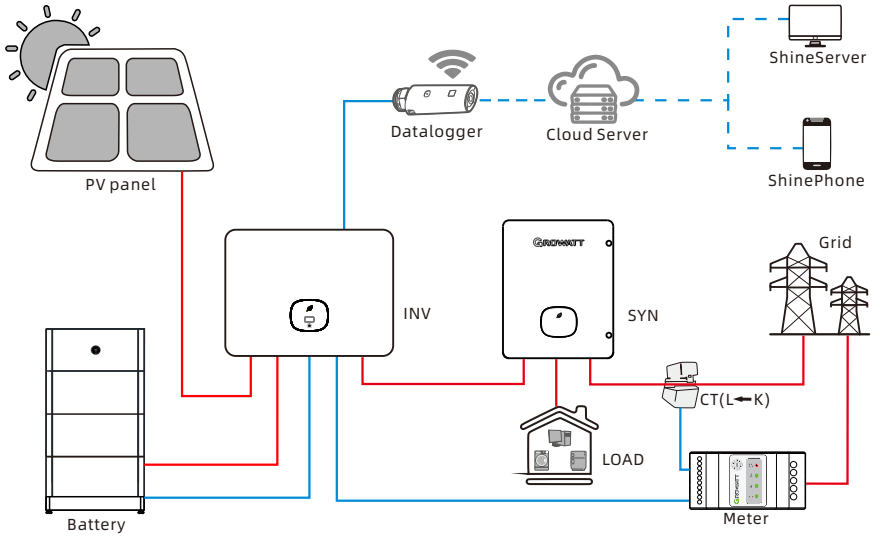

2.5 Operating mode

NOTICE	• The MOD TL3-XH inverter offers three operating modes and 9 configurable time segments, enabling to operate the inverter in a specific mode during different periods. For details, please refer to Section 8.4 Setting the operating modes. • In areas with high electricity prices or areas where no grid subsidies are available, it is recommended to set the Load First mode. • In areas with time-of-use electricity rates (peak/off-peak rates), it is recommended to configure a combination of modes. During peak-rate periods, set the inverter to the Grid First mode, and during off-peak-rate periods, set it to the Battery First mode. • If the local power grid is unstable, it is advisable to install a SYN BOX to enable off-grid operation, ensuring critical loads are backed up during power outages.

2.5.1 Load First mode

Priority: Load > Battery > Grid. When the solar power is sufficient, it is prioritized towards supplying the loads. The surplus energy is used to charge the battery and then export to the grid.

When the solar power is insufficient or the PV panels are not generating power, the battery will discharge to support the loads. If the battery discharges to the user-defined discharge cutoff SOC, it will stop discharging and the system will draw power from the grid to support the loads.

If the “charge from grid” function is enabled in compliance with local regulations, the battery charges at the maximum power (unless limited by the user-defined battery charging power). If the PV energy is insufficient, it will draw energy from the grid.

2.5.2 Battery First mode

Priority: Battery > Load > Grid. When the solar power is sufficient, it is prioritized towards charging the battery. The surplus energy goes to supply the loads and then export to the grid.
When the solar power is insufficient or the PV panels are not generating power, all solar power is used to charge the battery and energy drawn from the grid will support the loads.
If the "charge from grid" function is enabled in compliance with local regulations, the battery charges at the maximum power (unless limited by the user-defined battery charging power). If the PV energy is insufficient, it will draw energy from the grid.

2.5.3 Gird First mode

Priority: Load > Grid > Battery. When the solar power is sufficient, the inverter operates at its maximum output power to support the loads and export to the grid. The surplus solar power will charge the battery. If the solar power is insufficient, the battery will discharge.

2.5.4 Backup mode

NOTICE	• Only the MOD TL3-XH inverters with the 'BP' mark under the nameplate on the right side of the machine support off-grid operation. To enable this feature, you need to purchase the SYN BOX (SYN 50-XH-30) and a compatible battery system (APX 98034-P2). Refer to section 8.5 Backup function (Optional) for instructions on enabling this function.

The Backup mode is mainly designed for scenarios with an unstable grid and critical loads. In the event of a grid anomaly or outage, the inverter switches to the off-grid mode (default values: 230/400V, 50Hz) to supply power to critical loads. When the grid power is restored, the inverter switches back to the grid-tied mode.

2.5.4.1 The maximum off-grid power and recommended battery configuration

Information	• The BMS (battery management system) supports up to 6 battery modules (APX 5.0P-B1). • The maximum off-grid output power is determined by several factors, including the power of the battery system and the inverter's power rating. The power of each battery module is 2.5kW. Please choose the appropriate battery configuration to meet your power needs. • RCD load: total power ≤ 0.58× rated output power of the inverter.

The table below illustrates the relationship between the maximum off-grid output power, the number of battery modules (BM) and the inverter power rating.

Table 2-3 Relationship between the Max. off-grid output power, the number of BM and the inverter rating

No.of BM / Model / Output power	APX 5.0P-B1					
	1	2	3	4	5	6
MOD 3000TL3-XH	2.5kW	3kW	3kW	3kW	3kW	3kW
MOD 4000TL3-XH	2.5kW	4kW	4kW	4kW	4kW	4kW
MOD 5000TL3-XH	2.5kW	5kW	5kW	5kW	5kW	5kW
MOD 6000TL3-XH	2.5kW	5kW	6kW	6kW	6kW	6kW
MOD 7000TL3-XH	2.5kW	5kW	7kW	7kW	7kW	7kW
MOD 8000TL3-XH	2.5kW	5kW	7.5kW	8kW	8kW	8kW
MOD 9000TL3-XH	2.5kW	5kW	7.5kW	9kW	9kW	9kW
MOD 10KTL3-XH	2.5kW	5kW	7.5kW	10kW	10kW	10kW

2.6 Functions

2.6.1 Touch button

The MOD TL3-XH inverter features a touch button for user interaction. Tapping the button allows you to view different contents displayed on the OLED screen. Configuring parameters on the OLED display is also supported. For details, please refer to Section 6 Human-machine interaction.

2.6.2 LED indicator

The MOD TL3-XH inverter is equipped with a leaf-shaped LED indicator, which demonstrates the operating status of the inverter. The meaning of the LED indication is illustrated in the table below:

Table 2-4 LED indicator description

Symbol	Description	Inverter status	LED color	LED status
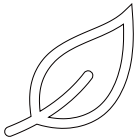	Inverter status indicator	Standby	Green	0.5s on and 2s off
		Normal	Green	Solid
		Fault	Red	Solid
		Inverter warning/Battery fault	Green	0.5s on, 0.5s off/0.5s on, 2s off
		Programming	Yellow	1s on and 1s off

2.6.3 OLED display

The MOD TL3-XH inverter comes with an OLED screen to display critical information, as shown in the figure below:

Figure 2-6 OLED display (Only the ZBAC version is supported)

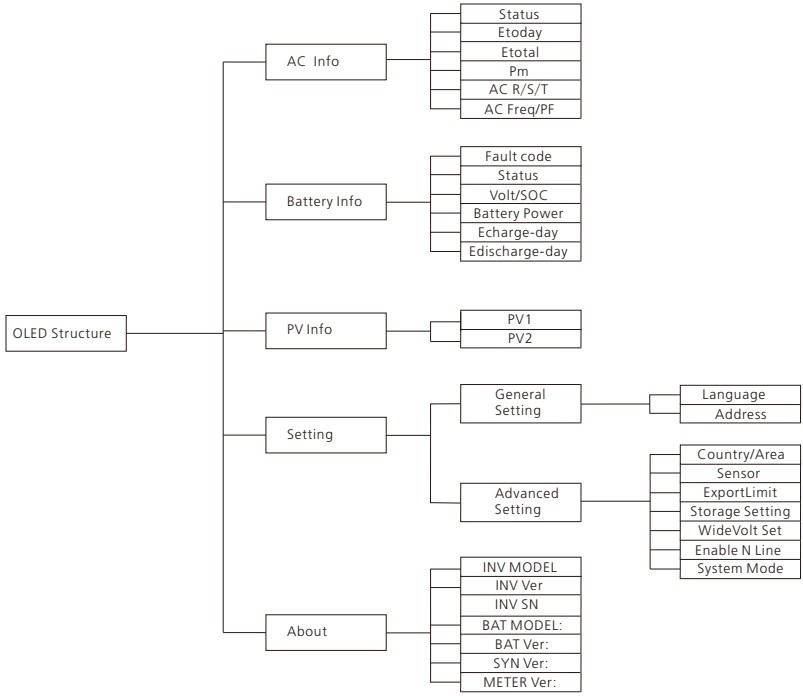

2.6.4 Export limitation

When the MOD TL3-XH inverter is connected to an energy meter and the communication between the inverter and the meter is established, the export limitation function can be activated. The detailed configuring steps are shown in Section 8.1 Export limitation.

Standard export limitation

- When the "Phase levels" is disabled and the export limitation value is set to a positive value, it indicates the power allowed to be exported to the grid as a percentage. For example, if the inverter's rated power is 10 kW, and the export limitation is set to 30%, the power allowed to be fed to the grid is 10 kW * 30% = 3 kW. If Phase L1 carries a 1 kW load, Phase L2 and Phase L3 do not carry a load, the output of the inverter would be: L1: 1.33 kW, L2: 1.33 kW, L3: 1.33 kW and the power fed to the grid would be: L1: 0.33 kW, L2: 1.33 kW, L3: 1.33 kW.
- When the export limitation value is set to a negative value, it indicates the power allowed to be drawn from the grid as a percentage. For example, if the inverter's rated power is 10 kW, and the export limitation is set to -30%, the power allowed to be drawn from the grid is 10 kW * 30% = 3 kW. If the load power is greater than 3 kW (e.g. load power is 4 kW), the power grid provides 3 kW, and other energy needed will be supplied by the inverter output. When the combined PV and Battery energy is insufficient (e.g. PV power + Battery power = 0.5 kW), the inverter will output at its maximum power while drawing energy from the grid to power the loads.

Phase level export limitation

- When the “Phase levels” is enabled and the export limitation value is set to a positive value, it indicates the power allowed to be exported to the grid as a percentage. For example, if the inverter's rated power is 10 kW, and the export limitation is set to 30%, the power allowed to be fed to the grid is 10 kW * 30% = 3 kW. If Phase L1 carries a 1kW load, Phase L2 and Phase L3 do not carry a load, the output of the inverter would be: L1: 2 kW, L2: 1 kW, L3: 1 kW and the power fed to the grid would be: L1: 1 kW, L2: 1 kW, L3: 1 kW.
- When the export limitation value is set to a negative value, it indicates the power allowed to be drawn from the grid as a percentage. For example, if the inverter's rated power is 10 kW, and the export limitation is set to -30%, the power allowed to be drawn from the grid is 10 kW * 30% = 3 kW. If the load power is greater than 3 kW (e.g. load power is 4 kW), the power grid provides 3 kW, and other energy needed will be supplied by the inverter output. When the combined PV and Battery energy is insufficient (e.g. PV power + Battery power = 0.5 kW), the inverter will output at its maximum power while drawing energy from the grid to power the loads.

2.6.5 Demand Response Modes (DRMs) & Radio Ripple Control Receiver (RRCR)

The MOD TL3-XH inverter is DRM compliant and can connect to a Radio Ripple Control Receiver (RRCR). A 30-pin connector is used as the input port for DRMs and RRCR. For the port definitions, you can refer to Section 5.7.1 COM port definition.

- In accordance with Australian standards, the MOD inverter has been designed to comply with Demand Response Modes (DRMs), with DRM 0 being a mandatory requirement. The DRMs is set to disabled by default. To enable it, please contact Growatt customer support. For details, please refer to Section 8.2 DRMs & Remote logic control.
- According to European standards, the MOD inverter can be connected to a RRCR , which is enabled by default. For details, please refer to Section 8.2 DRMs & Remote logic control.

2.6.6 Dry contact

The MOD TL3-XH inverter features the dry contact function. Once it is enabled, Pin 1 and Pin 2 of the COM port on the inverter will output a 12V signal when the inverter's output power reaches the preset activation power level. This signal can be used as an activation or deactivation signal for other devices. Conversely, when the inverter's output power reaches the specified deactivation power level, the voltage output from Pin 1 and Pin 2 of the inverter's COM port changes from 12V to 0V, providing another signal that can be used as an activation or deactivation signal for other devices. To configure this function, you can refer to section 8.3 Dry contact.

2.6.7 AFCI (Arc Fault Circuit Interrupter)

When the PV modules or the cables are in poor contact or damaged, an electrical arc may occur on the DC side, which might lead to a fire hazard. Growatt inverters are integrated with an arc-fault detection function in compliance with UL1699B-2018 standards. This feature is designed to ensure the safety of users’ lives and property.
The AFCI function is disabled by default. You can enable this function on a couple of platforms, including the OSS, ShineServer, ShinePhone and ShineTools. For details, please see Section 8.6 AFCI. Alternatively, you can contact Growatt support for assistance.

2.6.8 GFCI (Ground Fault Circuit Interrupter)

The MOD TL3-XH inverter is integrated with a leakage protection function. When the leakage current exceeds 300mA and continues for more than 300ms, the inverter will disconnect from the grid while reporting "Fault 201" and displaying "Residual I High".

This feature is designed to ensure the safety of users' lives and property. The GFCI function is enabled by default.

2.6.9 Monitoring

The MOD TL3-XH inverter has a reserved port for connecting to the datalogger. After installing and registering the Growatt datalogger, you can monitor the system's operation status and configure its functions on ShinePhone (APP), ShineServer (https://server.growatt.com), and the OSS (https://oss.growatt.com).

3 Inspection upon delivery

3.1 Checking the packing list

Before unpacking the inverter, check the outer packing materials for any externally visible damage. After unpacking the inverter, check the scope of delivery for completeness. If the scope of delivery is incomplete or damaged, contact your dealer.

Figure 3-1 Scope of delivery

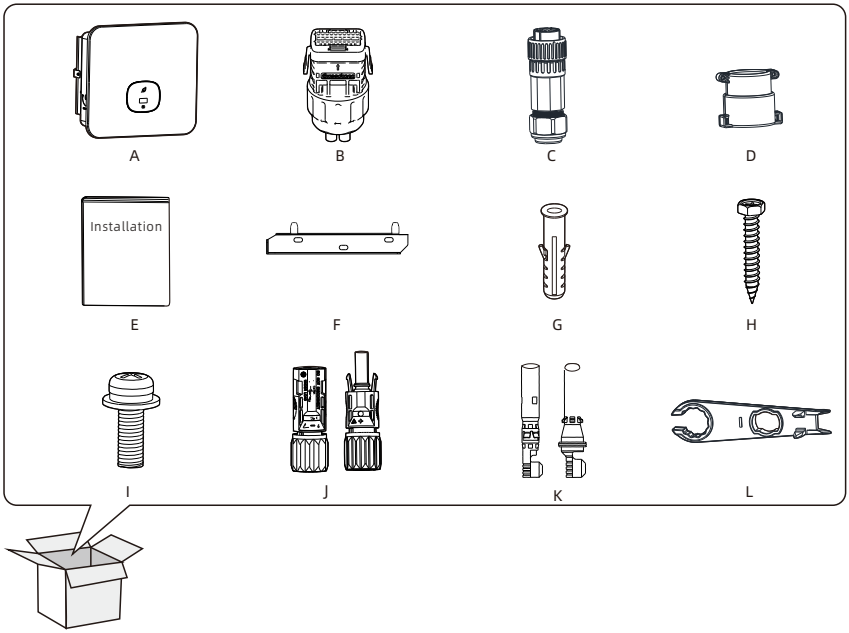

Table 3-1 Packing list of the MOD TL3-XH inverter

No.	Description	Quantity
A	Inverter	1
B	COM port connector	1
C	AC connector	1
D	Porective cover	1
E	Quick Installation Guide	1
F	Wall-mounting bracket	1
G	Plastic expansion tube	3
H	Expansion screw	3
I	Hexagon head screw	1
J	PV connector	2/2
K	PV metal contact	2/2
L	PV terminal removal tool	1

3.2 Moving the inverter

WARNING	• When moving the MOD inverter, do not place your hands on the terminals, which are not designed to support the weight of the inverter. • When placing the inverter on the ground, it is essential to put foam or cardboard underneath it to prevent damage to the heat sink.

Figure 3-2 Lifting the inverter

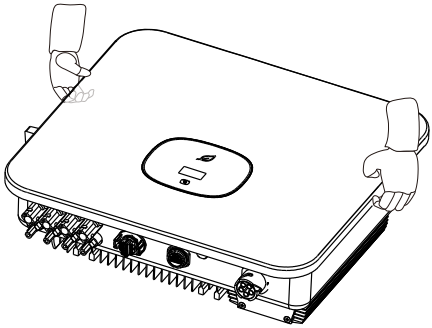

3.3 Appearance

NOTICE	• The MOD 3-10KTL3-XH has two PV inputs.

Figure 3-3 Appearance

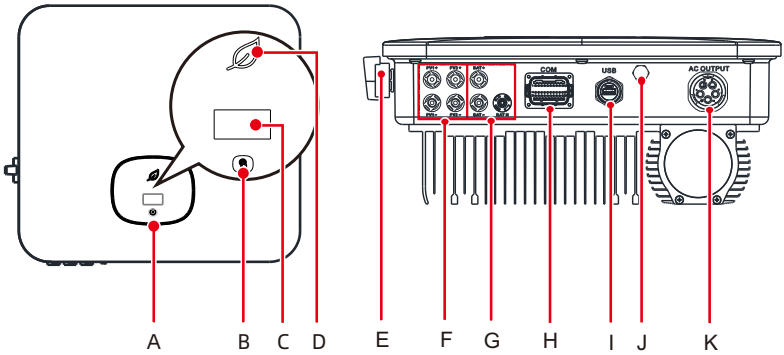

(A) Front Panel (B) Touch Button (C) OLED Screen (D) LED Indicator
(E) DC Switch (F) PV Terminal (G) Battery Terminal (H) COM Port
(I) USB Port (J) VENT Vaive (K) AC Terminal

3.4 Dimensions and weight

3.4.1 Dimensions of the package

Figure 3-4 Dimensions of the packing carton

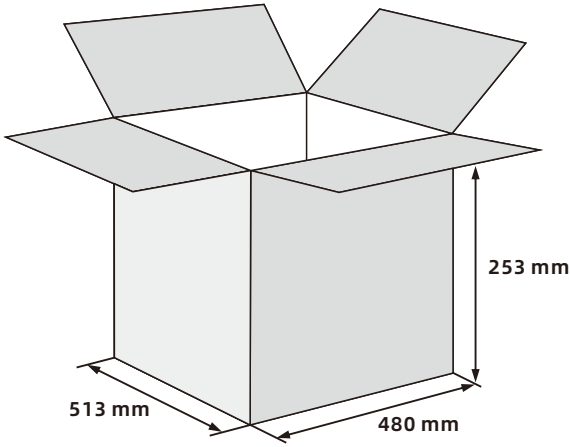

3.4.2 Dimensions and weight of the MID inverter

Figure 3-5 Dimensions of the inverter

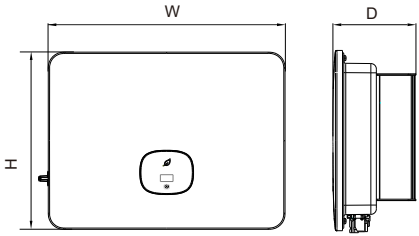

Table 3-2 Dimensions and weight

Model	Height (H)	Width (W)	Depth (D)	Weight
MOD 3-6KTL3-XH	387 mm	425 mm	147 mm	13 kg
MOD 7-10KTL3-XH	387 mm	425 mm	178 mm	14 kg

3.5 Storing the inverter

- Do not remove the exterior package of the inverter.
- Keep the storing temperature between -25℃ and 60℃, and the relative humidity between 5% RH and 95% RH.
- A maximum of 4 inverters can be stacked with package. Please use extreme caution when stacking the inverter to prevent device damage and personal injury resulting from a falling inverter.
- In case that the inverter has been stored for over two years, it must be inspected and tested by professional personnel before being put into operation.

4.1 Required tools

Table 4-1 Installation tools

Tools				
Hammer drill	Drilling bit (Φ=8 mm)	Hammer	Level	Cross-head screwdriver
Vacuum	Marker	Measuring tape	Heat gun	Multimeter
Wire stripper	Slanted mouth plier	Crimping plier		
Safety gloves	Goggles	Mask	Safety shoes	Helmet

4.2 Installation requirements

4.2.1 Environment requirements

- The inverter is protected to IP66, supporting both indoor and outdoor installation.
- Do not install the inverter in areas where flammable or explosive materials are stored.
- When determining the installation location, avoid water pipes and wires buried in the wall to prevent accidents during drilling.
- The inverter generates high temperature on the enclosure during operation, so please install it in a location that is inaccessible to children.
- If the inverter is installed in an area with dense vegetation, in addition to regular weeding, the ground beneath the inverter (recommended area: 3m × 2.5m) should be hardened, such as by laying concrete or gravel.
- The inverter should be installed in a dry and well-ventilated environment to ensure proper heat dissipation.
- Do not expose the inverter to direct sunlight, rain, snow, etc. It is recommended to install an awning over the inverter.

Figure 4-1 Environment requirements

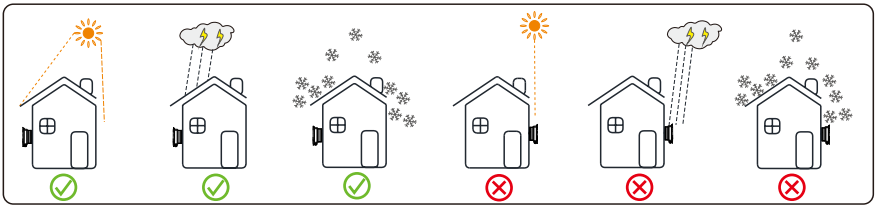

Figure 4-2 Installing an awning and clearance requirements

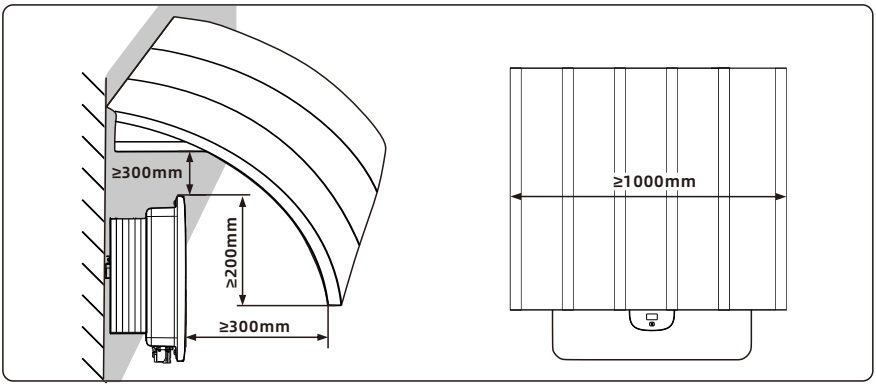

4.2.2 Carrier requirements

- Ensure that the installation surface meets the load-bearing requirement for supporting the weight of the inverter.
- The carrier where the inverter is installed must be fire-proof and high-temperature resistant.
- In residential areas, avoid mounting the inverter on gypsum boards or walls made of similar materials that has poor sound insulation performance to prevent the noise generated during its operation from disturbing residents in the living area.

4.2.2.1 Angle requirements

Figure 4-3 Angle requirements

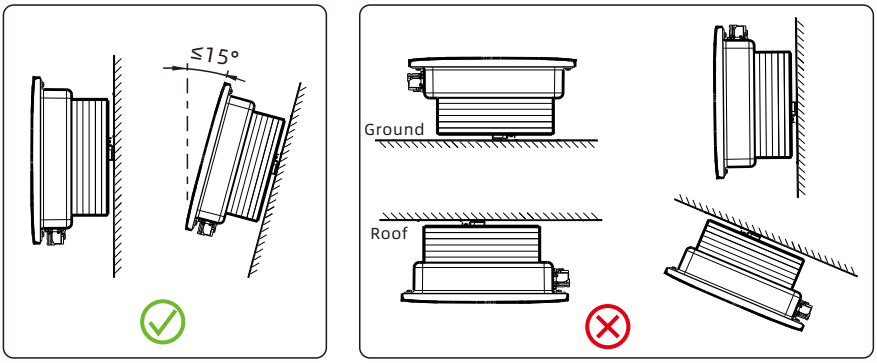

4.2.2.2 Space requirements

- To ensure optimal operation of the inverter and facilitate ease of operation, please reserve enough space around the inverter.
- The temperature at the ventilation air outlet is relatively high. Therefore, the clearance requirements must be strictly adhered to in order to prevent it from affecting the performance of other devices. Please refer to the figure below:

Figure 4-4 Space requirements

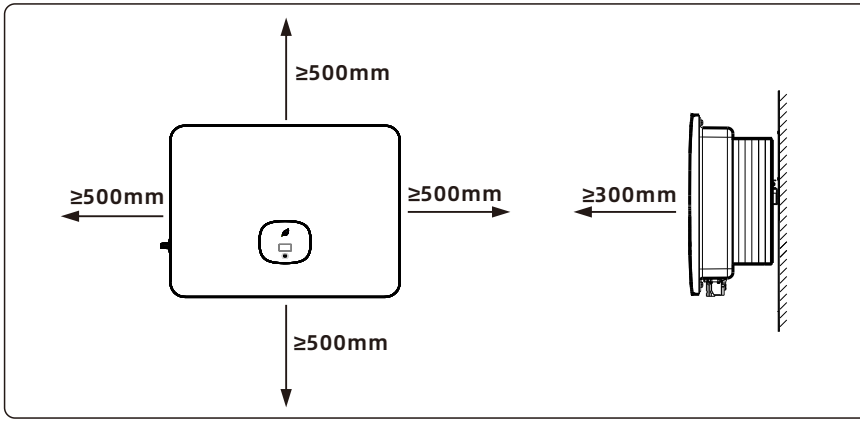

When multiple inverters are installed, please refer to the following figures to maintain proper clearances:

Figure 4-5 Horizontal installation

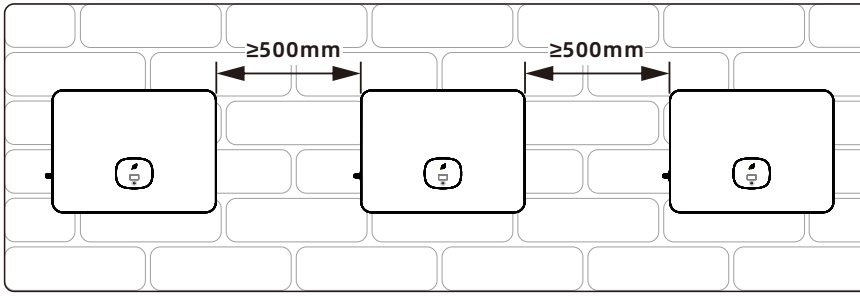

Figure 4-6 Two-row staggered installation

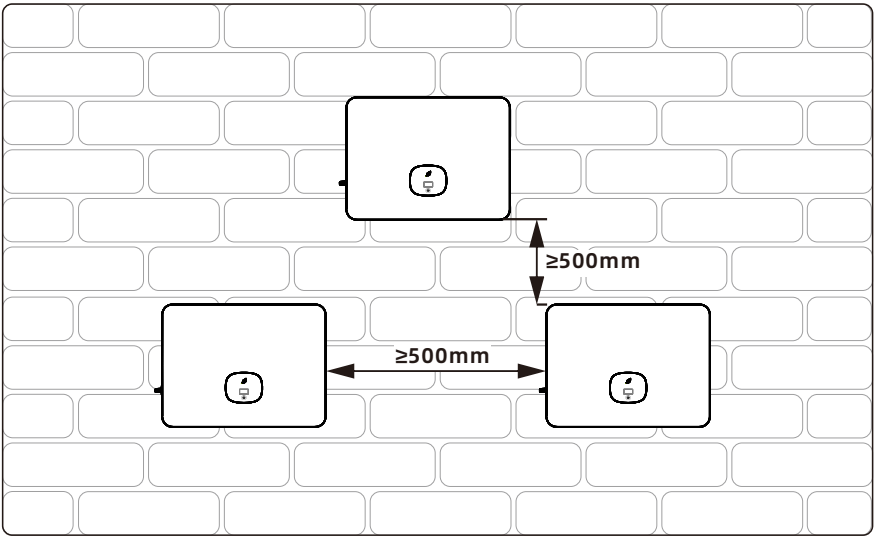

4.3 Wall-mounted installation

4.3.1 Installing the mounting bracket

DANGER	• Operation personnel should wear goggles and dust masks when drilling holes to prevent dust inhalation or contact with eyes.
WARNING	• After drilling holes, remove all the dust and debris inside and around the holes using a vacuum. Then, measure the hole spacing. For holes with inaccurate positons, drill holes again. • Ensure that the mounting bracket is level with the cement wall. Otherwise, the inverter cannot be mounted on the wall securely.

Step 1. Determining the hole position
Place the level at the predetermined installation position, then place the bracket above the level and mark the hole positions using the marker.

Step 2. Drilling holes
Drill holes on the marked positions with a Φ8 mm drill bit to a depth of 55 mm.

Step 3: Securing the mounting bracket
Knock the plastic expansion tube, which can be found in the accessory bag, into the hole with a hammer. Then secure the bracket into the plastic expansion tube by tightening the screw.

Step 4. Verifying that the bracket is securely installed
Shake the bracket with your hands to check if the bracket is securely installed.

Figure 4-7 Wall-mounted installation

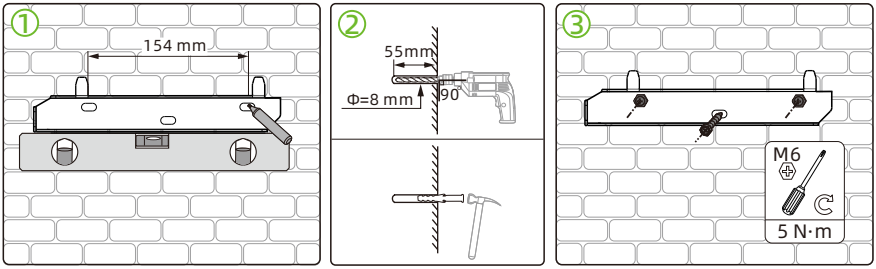

4.3.2 Installing the inverter

Information	• Prior to installing the inverter, ensure that the mounting bracket is securely installed. • Electrical connections can only be performed after the securing screws are tightened.

Step 1. Hang the inverter onto the bracket, carefully adjusting its position to ensure it is balanced on the wall bracket.

Figure 4-8 Moving the inverter by one person

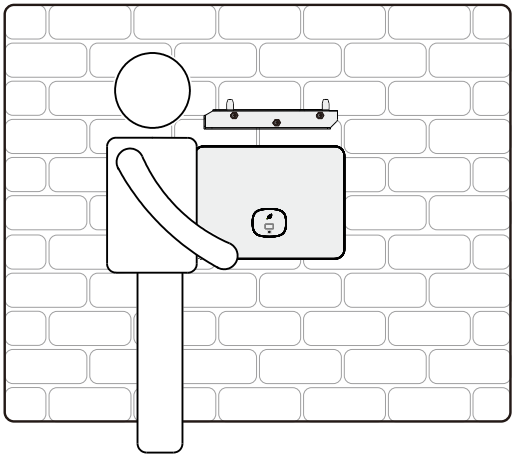

Step 2. Secure the inverter to the bracket using M4 screws.

Figure 4-9 Securing the screw onto the inverter

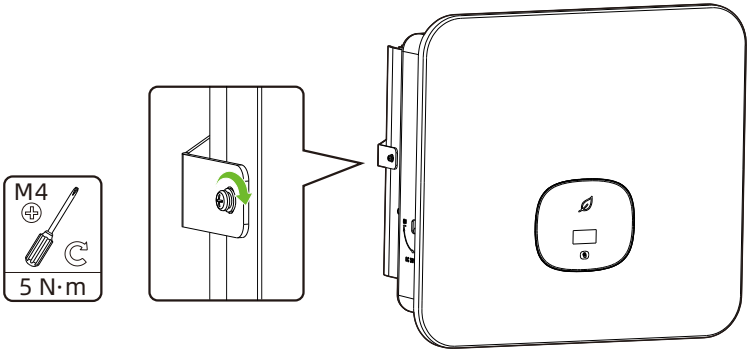

Electrical connection 5

5.1 Safety precautions

DANGER	• When exposed to light, the PV modules generate high DC voltage which is present in the DC cables. Ensure that the DC SWITCH on the inverter is set to OFF before connecting cables. • You are recommended to prepare firefighting equipment on site, such as fire sand and fire extinguishers. • Wear insulated gloves and use insulated tools to prevent electric shock injuries.
WARNING	• Follow the wiring instructions specified in the user manual. otherwise, any device damage caused by improper wiring will not be covered under any warranty. • Unqualified persons shall not perform any electrical connections. • Wear insulated gloves to prevent static electricity from damaging the components of the inverter. • Do not use single-strand wire as the output wire for the inverter. • Do not use aluminum wire as the output cable. • Avoid overstress on the cable, which could lead to poor contact.
NOTICE	• When assembling cables, please keep a distance from the inverter to prevent cable debris from falling into the inverter, which might cause short circuits. • Damage caused by dust or moisture penetration due to improper installation of waterproof connectors is beyond the scope of warranty.

5.2 Preparing cables

Note: The cable specifications must comply with local regulations.

Table 5-1 Cable specifications

No.	Cable	Type	Recommended specifications	Source
1	DC input cable	Outdoor PV cable	• 4mm²~6mm²	Prepared by users
2	AC output cable	Outdoor copper core cable	• MOD 3-6KTL3-XH:6mm²~8mm² • MOD 7-10KTL3-XH:6mm²~10mm²	Prepared by users
3	Signal cable	Outdoor shielded twisted pair cable	• 0.2mm²~1mm²	Prepared by users
4	Grounding cable	Outdoor copper core cable	• ≥5.5mm²	Prepared by users

5.3 Preparing the AC breaker

- An external AC circuit breaker should be installed on the AC side of the inverter to ensure a safe disconnection between the inverter and the grid.
- The AC breaker is not required to offer residual current protection as the inverter is equipped with a sensitive residual current detection device (RCD). If local regulations require the use of an AC breaker that incorporates residual current protection, it is advised to install a type A RCD between the inverter and the grid. The rated residual current must be greater than or equal to 300 mA.

DANGER	• If an AC breaker with a rating greater than the recommended specification or the value outlined in local regulations is used, the inverter might fail to disconnect from the grid when an exception occurs, which might lead to severe damage. Growatt shall not be liable for the consequences.
WARNING	• Each inverter must be equipped with an AC output breaker, and multiple inverters cannot share the same AC breaker.
NOTICE	• Users are responsible for preparing the terminals for connecting the AC breaker.

Table 5-2 AC breaker specifications

Inverter Model	Recommended AC breaker specification
MOD 3000TL3-XH	10A/230V
MOD 4000TL3-XH	10A/230V
MOD 5000TL3-XH	16A/230V
MOD 6000TL3-XH	16A/230V
MOD 7000TL3-XH	16A/230V
MOD 8000TL3-XH	25A/230V
MOD 9000TL3-XH	25A/230V
MOD 10KTL3-XH	25A/230V

5.4 Connecting the grounding cable

DANGER	• Please ensure that the grounding cable is securely connected; failure to do so may lead to an electric shock. • It is strictly prohibited to utilize the N-line as a grounding cable and connect it to the inverter's enclosure, as this can cause an electric shock.
WARNING	• The PE point at the AC output terminal serves only as an equipotential connection point and should not substitute for the protective grounding point on the enclosure. • It is recommended to apply silicone gel or paint around the grounding terminal as a protective coating after installation to prevent corrosion. • Lightning protection for the PV system should comply with international standards or IEC standards. Failure to do so may result in damage to PV components, accessories, inverters, and distribution facilities. In such cases, the company shall not be liable for the consequences.
NOTICE	• Be careful not to damage the wire core while stripping wires. • The cavity formed after crimping the conductor in OT terminals should fully encapsulate the wire core, ensuring a tight and secure connection. • You can use heat shrink tubing or insulating tape to cover the crimped area. The use of heat shrink tubing is described as an example. • When using a heat gun, please take precautions to avoid equipment burns.

Figure 5-1 Preparing the cable

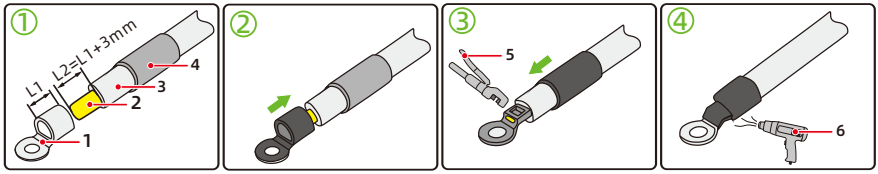

(1) OT terminal (2) Core wire (3) Cable

(4) Heat shrink tubing (5) Hydraulic pilers (6) Heat gun

Figure 5-2 Screw for grounding the enclosure

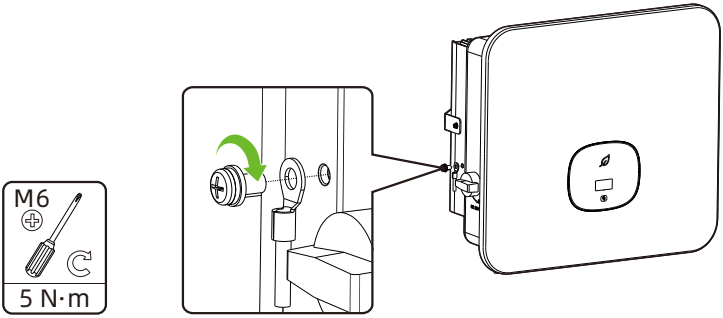

5.5 Connecting the AC output cable

DANGER	• An external AC circuit breaker is required on the AC side to ensure that the inverter can be safely disconnected from the grid. • If an AC breaker with a rating greater than the recommended specification or the value outlined in local regulations is used, the inverter might fail to disconnect from the grid when an exception occurs, which might lead to severe damage. Growatt shall not be liable for the consequences.
WARNING	• Each inverter must be equipped with an AC output breaker, and multiple inverters cannot share the same AC breaker.
NOTICE	• Be careful not to damage the wire core while stripping wires. • The cavity formed after crimping the conductor in OT terminals should fully encapsulate the wire core, ensuring a tight and secure connection. • You can use heat shrink tubing or insulating tape to cover the crimped area. The use of heat shrink tubing is described as an example. • When using a heat gun, please take precautions to avoid equipment burns.

Step 1. Strip the five wires (A, B, C, N, PE) to a length of 7~8 mm. Route the wires through the cable gland, seal and housing of the AC connector, then connect them to the corresponding terminals. Secure the wires in place using the hex socket head screws.

Figure 5-3 Assembling the AC connector

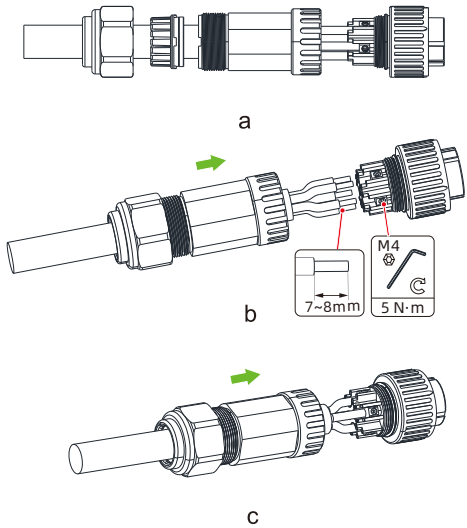

Step 2. Connect the AC connector to the AC output terminal on the inverter. Ensure that the five wires are correctly assigned to the terminals according to the label on the AC output terminal. Then secure the protective cover onto the AC connector.

Figure 5-4 Connecting and Removing the AC connector

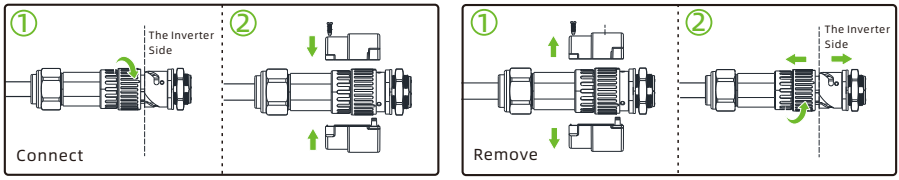

Figure 5-5 Finishing the AC connection

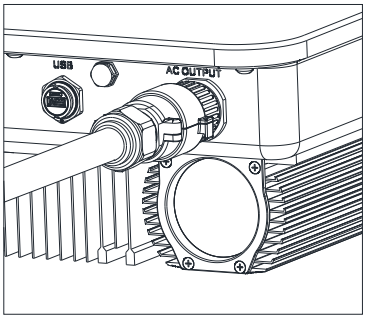

5.6 Connecting the DC input cable

DANGER	• Before connecting the DC input cables, verify that the DC voltage is within the permissible range (< 36V DC) and ensure that the DC SWITCH on the inverter is set to the OFF position. Otherwise, high voltages may lead to electric shocks. • Do not perform maintenance operations on the DC input cables when the inverter is in operation, such as connecting or removing a PV string or its component. Failure to do so may cause electric shocks. • If the DC input terminals of the inverter are not connected to the PV strings, do not remove the waterproof cover from the DC input terminals, as this could compromise the equipment's protection rating.
WARNING	Please ensure that the following conditions are met, as failure to do so may damage the inverter or pose a fire hazard. In such cases, the company shall not be liable for any consequences: • The maximum open-circuit voltage of each PV string must not exceed 1100Vdc under any conditions. • When the voltage of each PV string exceeds 1000V, the inverter will stop power output. • PV modules in each string should be of the same specification and type. • The maximum short-circuit current for each MPPT must not exceed 20A under any circumstances. • In cases where the inverter has no isolated transformer for its output, the negative pole of the PV panel is energized and grounding PV- is prohibited. • Pay attention to the correct polarity when connecting the DC cables. Connect the positive and negative terminals of the PV string to the positive and negative PV terminals on the inverter correspondingly. • In case that the DC cables are reversely connected, do not operate the DC switch and the positive and negative connectors immediately. Wait until the solar irradiance declines in the evening and the PV string current drops below 0.5A. Then turn the DC SWITCH to the OFF position and remove the positive and negative connectors to correct the polarity of the DC input cables.
NOTICE	Device damage resulting from the following circumstances during the installation of PV strings and the inverter is beyond the scope of warranty: • Improper installation of distribution cables or incorrect wiring that leads to a short circuit between the positive or negative terminal of the PV string and ground, which may cause an AC/DC short circuit during inverter operation. • Moisture or dust penetration due to inappropriate sealing on the PV side.

Description
The MOD 3-10KTL3-XH inverter has two PV inputs.

Figure 5-6 PV inputs

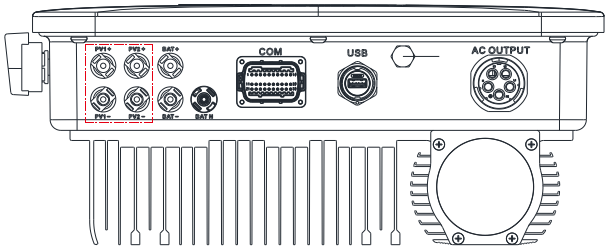

5.6.1 Connecting the PV terminal

WARNING	• Please use the positive and negative metal contacts and the DC connectors delivered with the inverter package. Using other incompatible models may result in severe consequences, which will void the warranty. • Crimp the PV metal contact with a dedicated crimper. Using an inappropriate crimping tool may lead to severe consequences, and any device damage caused by this is not covered by the warranty. • Cables with high rigidity are not recommended for the DC input as bending of cables may lead to poor contact of terminals. • When assembling the DC connectors, pay attention to the correct polarity and label the positive and negative cables. • After snapping the positive and negative connectors into place, pull the cables slightly to ensure that they are securely in place. • When wiring the DC input cables at the installation site, leave at least 50 mm of them slack. The axial tension on the PV connector should not exceed 80N and do not apply radial stress or torque on the PV connectors.

Figure 5-7 Preparing the PV input cables

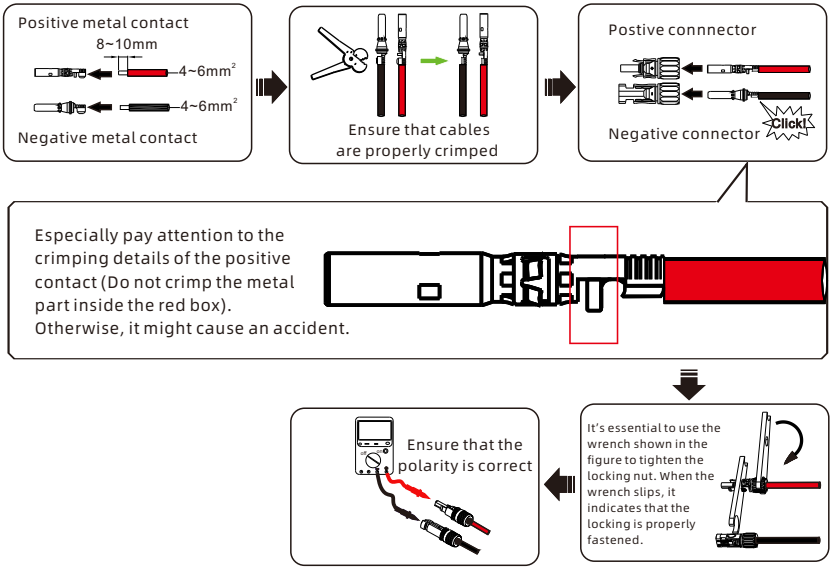

5.7 Connecting the communication cable

WARNING	• When arranging the signal cables, separate them from power cables and keep them away from strong interference sources to avoid communication interruption. • If a signal cable is not required to be connected, please do not remove the COM terminal dustproof cover preinstalled on the inverter. • Crimp the tube terminal onto the end of the signal cable using a tube terminal crimper. Ensure the connection is secure and does not detach, as this could otherwise affect communication quality.

5.7.1 COM port definition

Figure 5-8 30-pin COM port

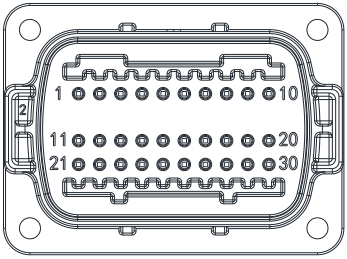

Table 5-3 Pin definition of the COM port

PIN	Definition	Function	PIN	Definition	Function
1	+12V	Dry contact: the power supply should not be greater than 2W	16	DRM0/COM	/
2	COM		17	RS485A4	SYN communication port
3	RS485A1	Parallel communication port	18	RA485B4	
4	RS485B1		19	/	/
5	RS485A3	Meter communication port	20	/	/
6	RS485B3		21	BOX.EN+	SYN detection signal port
7	RS485A2	Battery 1 communication port	22	BOX.EN-	
8	RS485B2		23	/	/
9	WP+	Battery 1 wakeup signal	24	/	/
10	WP-		25	/	/
11	DRM1/5	Relay contact 1 input	26	/	/
12	DRM2/6	Relay contact 2 input	27	/	/
13	DRM3/7	Relay contact 3 input	28	/	/
14	DRM4/8	Relay contact 4 input	29	/	/
15	REF/GEN	GND	30	/	/

5.7.2 Connecting the 30-pin COM connector

Strip the cable to a length of 10 mm then pass it through the waterproof connector cover and the threaded sleeve. Crimp the corresponding terminal provided in the accessory bag onto the communication cable, and plug in the 30-pin communication connector.

Figure 5-9 Connecting the 30-pin COM connector

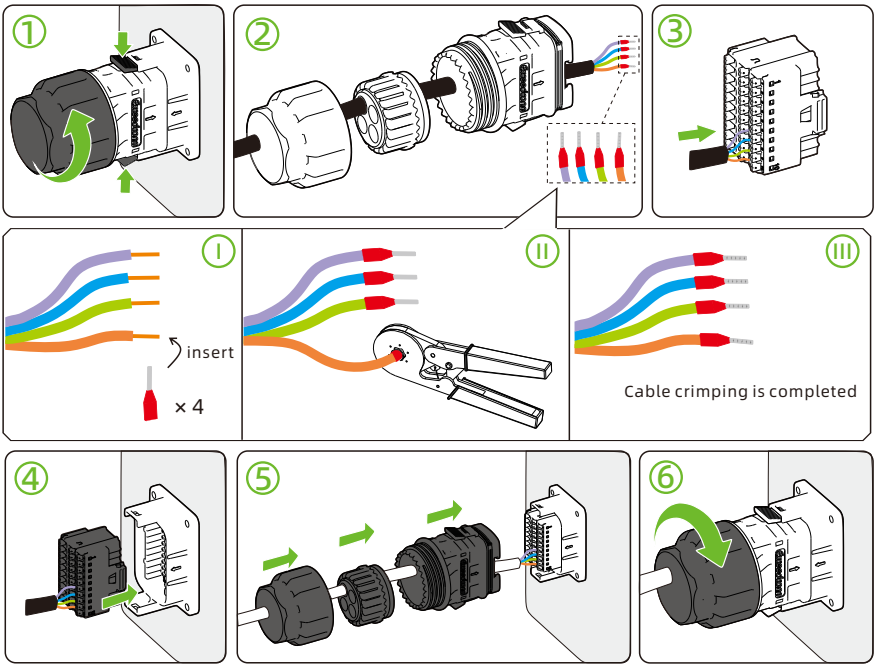

5.8 Connecting the battery (optional)

The MOD inverter features one battery input channel with the BAT+/BAT-/BATN terminals.

DANGER	• Before connecting the battery, ensure that the DC SWITCH on the battery is set to the OFF position. • When the system is in operation, do not connect or disconnect the power cables between the battery and the inverter. • Ensure that the battery is properly connected to the inverter. Device damage caused by incorrect wiring is not cover under the warranty.
WARNING	• Personnel who have not received training are not permitted to perform electrical connections.
NOTICE	• Cables are differentiated with different colors, please follow the color convention when wiring cables.

5.8.1 Connecting a single battery cluster

For details, please refer to the user manual of the battery or scan the QR code below.

Figure 5-10 Connecting a single battery cluster

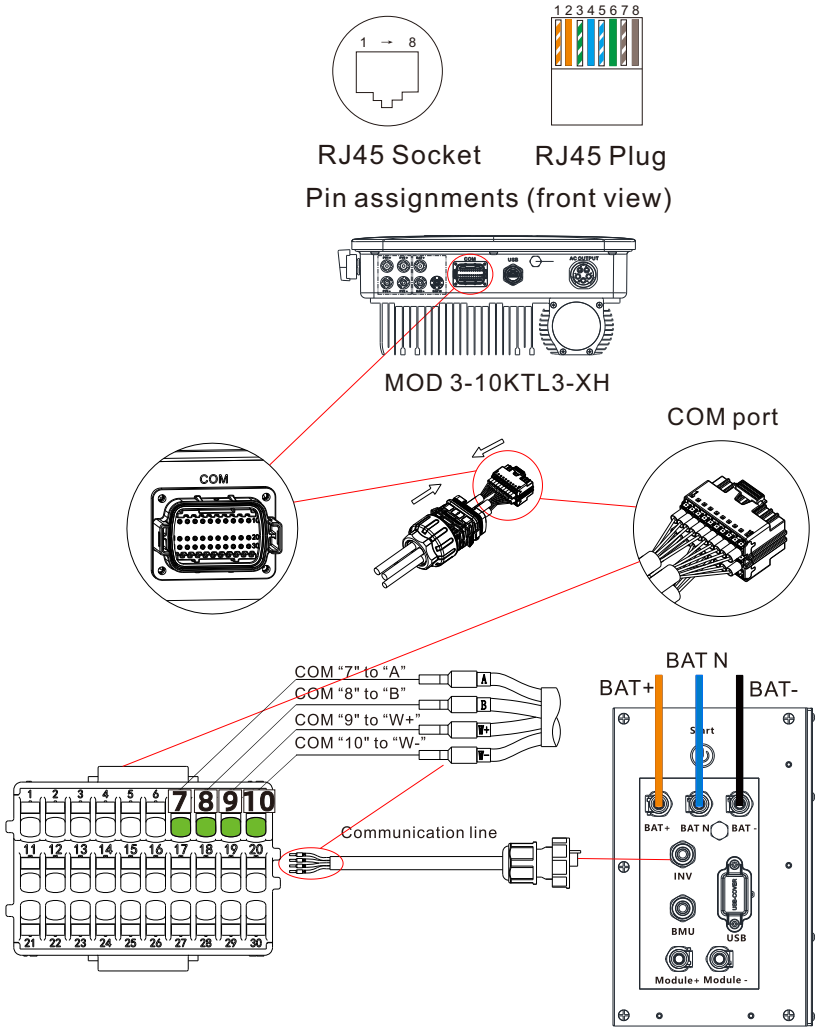

5.9 Connecting the meter (optional)

NOTICE	• The MOD inverter supports export limitation, setting different operating modes, and monitoring self-consumption. To enable these functions, an external smart meter is required. Please purchase the meter from Growatt and the recommended model is the TPM-CT-G 100A smart meter. • After connecting the meter, you need to enable the meter communication on the inverter. For details, please see Section 6.5 Enabling the meter.

Recommended meter models:

Table 5-4 Meter specification

No.	Brand	Recommended model	Applicable system	Source
1	Growatt	• TPM-CT-G 100A	System with a single inverter /AC-Coupled system	Purchase from Growatt
2	Eastron	• SDM630-Modbus V3	System with a single inverter	Purchase from Growatt
3	Eastron	• SDM630MCT 40mA	System with a single inverter / multiple inverters connected in parallel	Purchase from Growatt
4	CHINT	• DTSU666/3*220/5(80)A	System with a single inverter	Purchase from Growatt
5	CHINT	• DTSU666/3*220/1.5(6)A	System with a single inverter	Purchase from Growatt

WARNING	• The phase sequence of the inverter must correspond with that of the meter; otherwise, it will not support export limitation and operating the inverter in different modes. • A smart meter is required for the energy storage system; otherwise, certain functions will be unavailable.

5.9.1 Connecting Growatt smart meter

Table 5-5 Growatt smart meter specific parameters

Model		APM-CT-G
Dimensions		90*45*65mm (excluding the buckle)
IP rating		IP20 (indoor)
Supported measuring modes		Three-phase three-wire (3P3W), three-phase four-wire (3P4W)
Supported monitoring parameters		Voltage/current/active power/ reactive power/power factor/ frequency
3P4W (TPM-CT-G)	Rated voltage	230Vac/400Vac
	Phase voltage range	100Vac – 416Vac
3P3W (TPM-CT-G)	Rated voltage	230Vac/400Vac
	Phase voltage range	100Vac – 240Vac
	Line voltage range	173Vac – 416Vac
Measuring frequency		45-65Hz
CT		250A/40mA ,100A/40mA
Average power consumption		1W
Operating temperature		-30~65℃
Operating humidity		<85%RH
Communication address		1
Communication distance		200m
Communication protocol		MODBUS-RTU
Communication port		PIN A, RS485A/PIN B, RS485B

Information	• K→L is printed on the CT. K refers to the grid side and L refers to the load side.

5.9.1.1 3P3W wiring

Figure 5-11 3P3W System (with a Growatt smart meter)

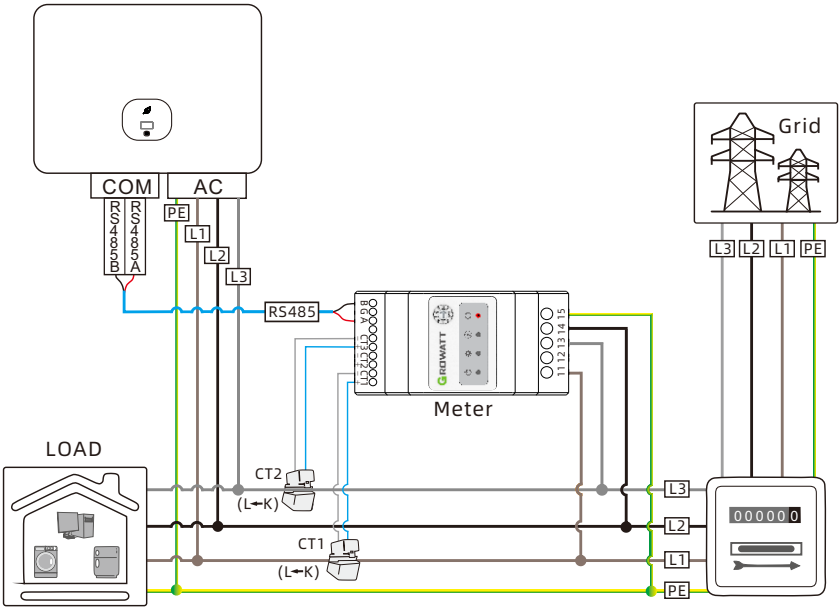

5.9.1.2 3P4W wiring

Figure 5-12 3P4W System (with a Growatt smart meter)

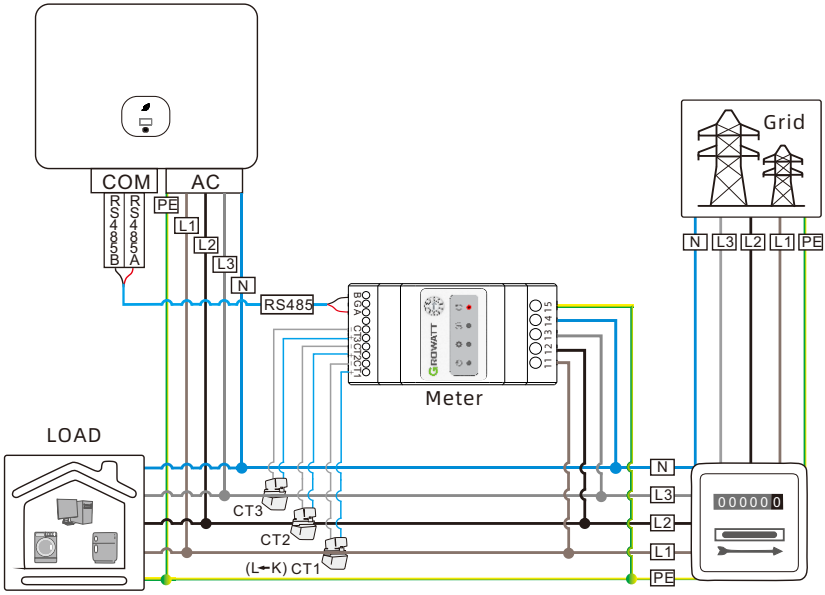

5.9.2 Connecting Eastron smart meter

Table 5-6 Eastron smart meter specific parameters

Manufacturer	Eastron
Type	SDM630CT-Modbus V3
General Specifications	
Voltage AC (Un)	3*230V
Voltage Range	184~299V AC
Base Current (Ib)	10A
Power consumption	≤2W
Frequency	50/ 60Hz(±10%)
AC voltage withstand	4kV for 1 minute
Impulse voltage withstand	6kV-1.2uS waveform
Over current withstand	20Imax for 0.5s
Pulse output 1	1000imp/kWh (default)
Pulse output 2	400imp/kWh
Display Max. Reading	LCD with white backlit 999999kWh
Environment	
Operating temperature	-25℃to +55℃
Storage and transportation temperature	-40℃to +70℃
Reference temperature	23℃±2℃
Relative humidity	0 to 95%, non-condensing
Altitude	up to 2000m
Warm up time	3s
Installation category	CAT II
Mechanical Environment	M1
Electromagnetic environment	E2
Degree of pollution	2
Mechanics	
Din rail dimensions	72x66x100 mm (WxHxD) DIN 43880

Mechanics	
Mounting	DIN rail 35mm
Ingress protection	IP51 (indoor)
Material	Self-extinguishing UL94V-0
Communication port	PIN A, RS485A/PIN B, RS485B

Information	• Pin 1/2/3/4 of the meter are connected to the grid and Pin 5/6/7/8 to the inverter. • The communication address of Eastron meter is 2.

5.9.2.1 3P3W wiring

Figure 5-13 3P3W System (with an Eastron smart meter)

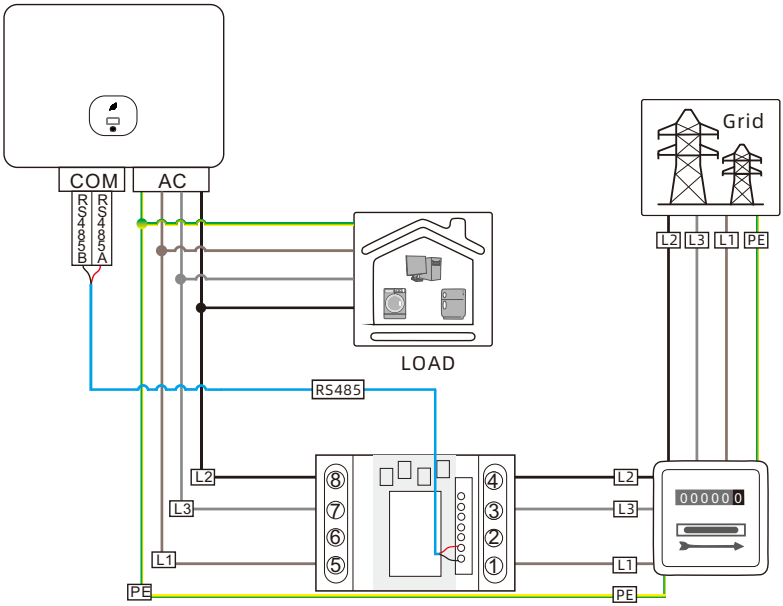

5.9.2.2 3P4W wiring

Figure 5-14 3P4W System (with an Eastron smart meter)

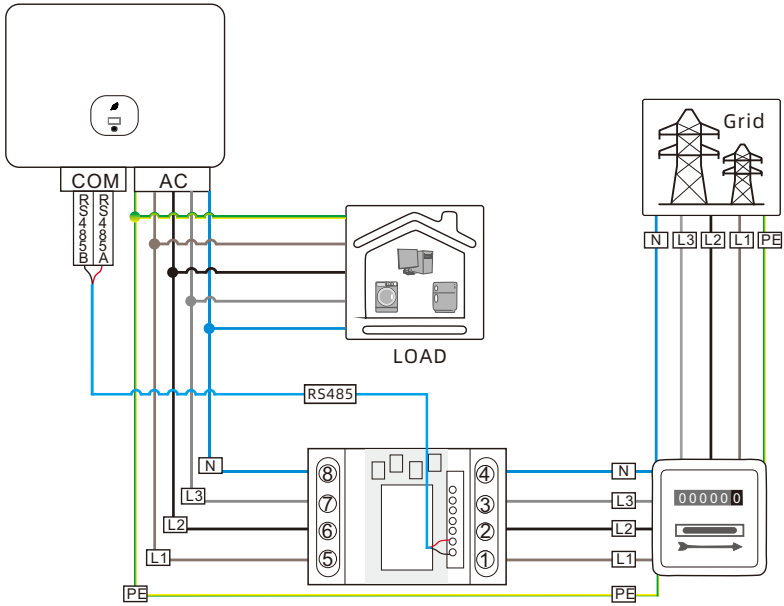

5.9.3 Connecting CHINT smart meter

Table 5-7 CHINT smart meter specific parameters

General specifications	
Rate voltage	3×230/400Vac
Reference frequency	50Hz/60Hz
Specified operating voltage range	0.9Un~1.1Un
Extended operating voltage range	0.8Un~-1.15Un
Voltage line power consumption	<1.5W/6VA
Input current	0.25-5(80)A
Starting current	0.004Ib
AC voltage withstand	2kV /5mA for 1 minute
Impulse voltage withstand	4kV-1.2/50uS waveform
Max. Reading	9999999kWh

Accuracy	
Active power	1% of range maximum
Reactive power	2% of range maximum
Environment	
Rated temperature	-10℃~+45℃
Limit temperature	-25℃~+70℃
Relative humidity (average annual)	<75%
Atmosphere	63.0kPa~106.0kPa
Installation category	CAT III
Degree of pollution	Conform to RoHS
Communication	
Communication	RS485 output for Modbus RTU
Baud rate	9600
Pulse	400imp/kWh
Communication port	PIN 24, RS485A/PIN 25, RS485B
Mechanics	
Din rail dimensions	100×72×65mm (LxW×H)
Mounting	DIN rail 35mm
Sealing	IP61 (indoor)

Information	• Pin 1/2/3/4 of the meter are connected to the grid and Pin 5/6/7/8 to the inverter. • The communication address of CHINT meter is 4.

5.9.3.1 3P4W wiring

Figure 5-15 3P4W system (with a CHINT meter)

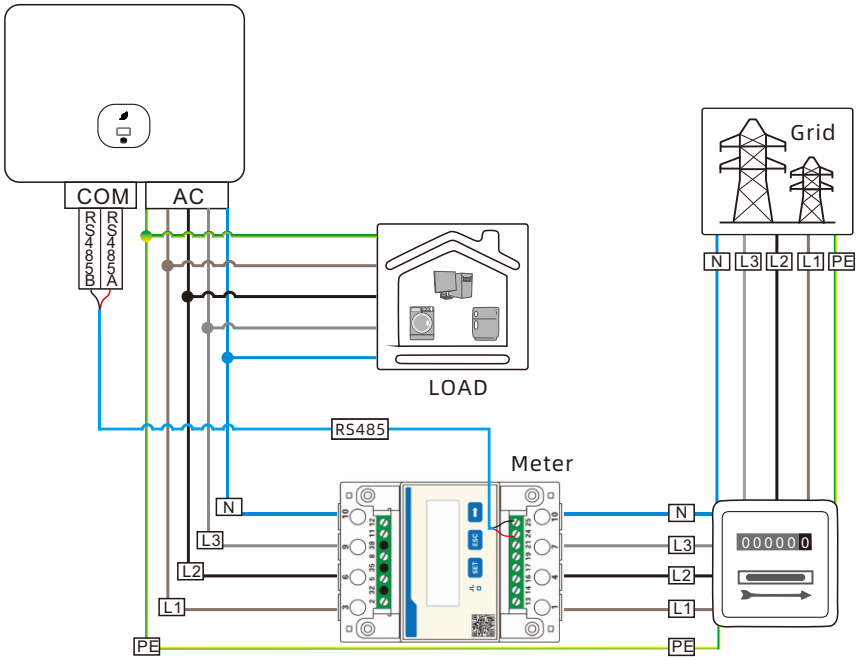

5.10 Connecting the SYN BOX (optional)

NOTICE	• The MOD TL3-XH inverter supports to be connected to the SYN BOX (the SYN 50-XH-30 backup box is recommended). • Upon completion of installation, turn off the circuit breakers on the inverter side and the load side inside the SYN BOX. It is prohibited to turn on the breaker on the inverter side and the bypass breaker in the SYN BOX at the same time.

Figure 5-16 SYN BOX wiring diagram

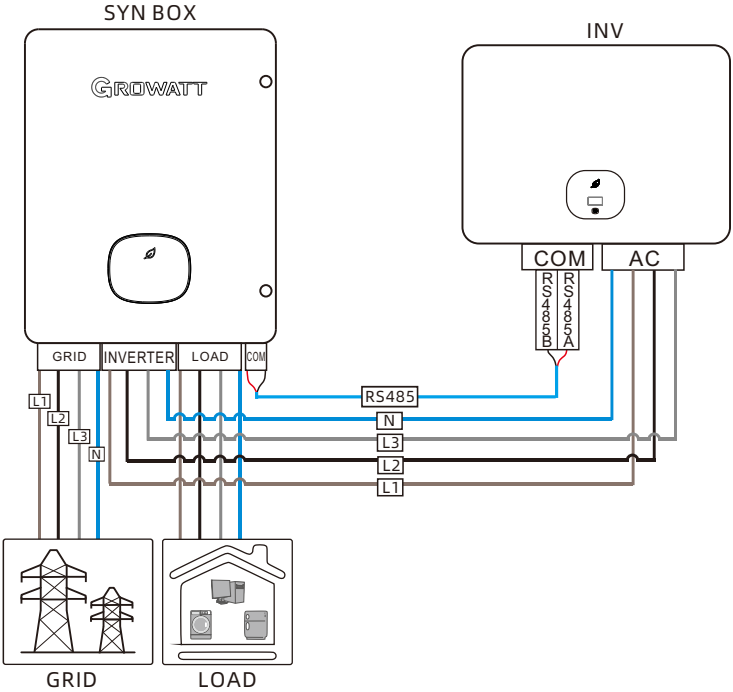

5.11 Connecting the monitoring module

Information	• The datalogger/SEM-X/ShineMaster-X is an optional accessory and should be purchased by the users separately.

5.11.1 The monitoring module model

With a monitoring module connected, the MOD TL3-XH inverter can be monitored via the cloud server and the APP.
Recommended datalogger model:

Table 5-8 Datalogger specifications

No.	Brand	Recommended model	Applicable system
1	GROWATT	• ShineWiFi-X	A single inverter
2	GROWATT	• ShineLan-X	A single inverter
3	GROWATT	• ShineLink-X	A single inverter
4	GROWATT	• ShineMaster-X	A single inverter

5.11.2 Configuration

Step 1. Setting the communication address of the inverter

Information	• The communication address ranges from 1 to 254.

After the inverter is powered on, you can set the inverter communication address through the RS485 or the USB to WiFi module. Please refer to Section 8.7 for instructions on setting the inverter communication address.

Step 2. Configuring the ShineMaster-X/SEM-X
The SEM-X box comprises the ShineMaster-X and other components. Scan the QR code below to obtain the SEM-X User Manual for guidance on configuring the SEM-X and ShineMaster-X (in Chapter 3).

【SEM-X Configuration Guide】

5.11.3 Installing and removing the datalogger

Figure 5-22 Installing and removing the datalogger

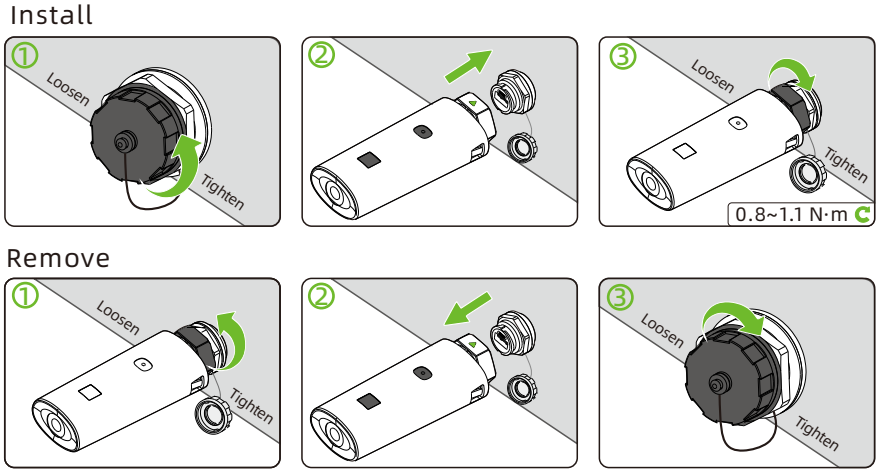

5.11.4 Configuring the datalogger

You can access the configuration guide of the following datalogger models by scan the corresponding QR code.

Table5-9 Datalogger configuration guide

Datalogger	
ShineWiFi-X Configuration Guide	
ShineLan-X Configuration Guide	
ShineLink-X Configuration Guide	

Human-machine interaction 6

6.1 OLED control

Table 6-1 Touch button

Symbol	Description	Explanation	
	Touch button	Single tap	Switch pages or increase the number by 1
		Double tap	Access settings or confirm your setting
		Triple tap	Return to the previous interface
		Long press for 5s	Restore to the default value

6.2 Setting the language

The MOD inverter offers multiple language options. Single tap to view different options; double tap to confirm your setting. Select the language as shown below:

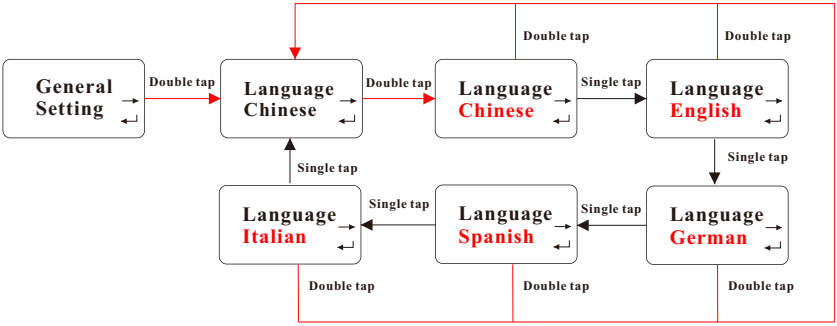

6.3 Setting the communication address

Single tap to increase the number by one; double tap to confirm your setting. Set the time as shown below:

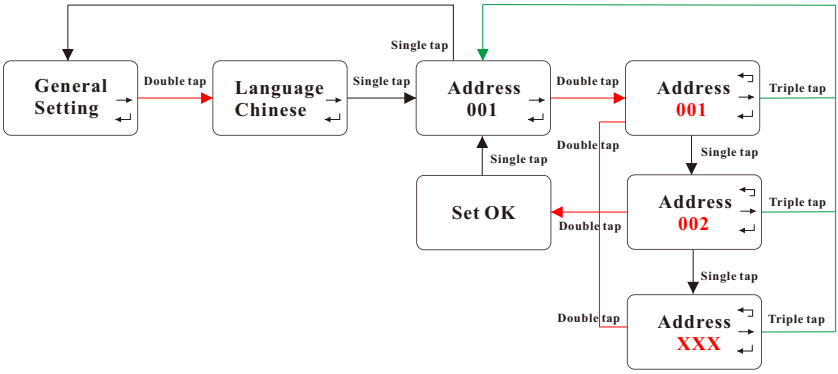

6.4 Setting the country/area

Single tap to view the options or increase the number by one; double tap to confirm your settings. The password for advanced settings is 123. After entering the password, you can modify the Country/Area setting.

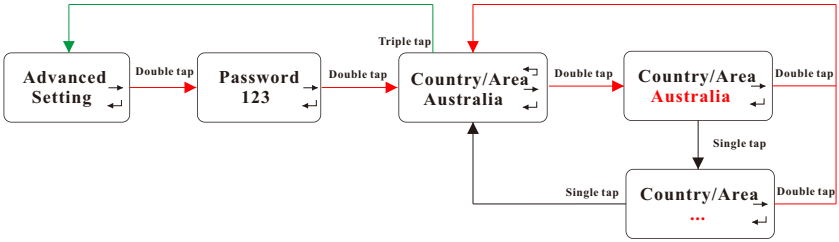

6.5 Enabling the meter

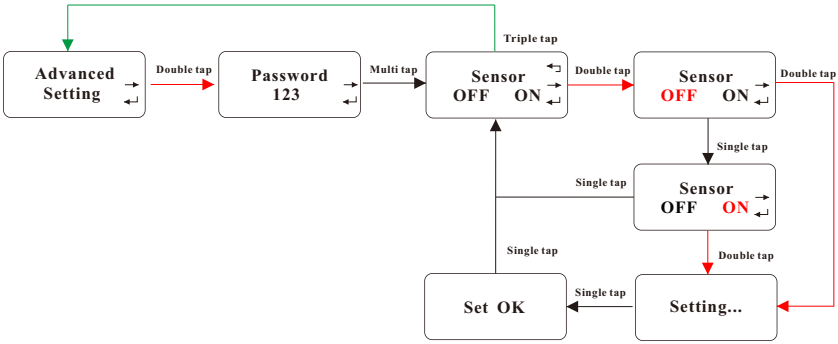

6.6 Setting the export limitation parameters

The MOD TL3-XH inverter supports the export limitation function when working with an external energy meter. Users can configure the parameter on the OLED screen. Single tap to view the options available or increase the number by one; double tap to confirm your setting. Set the export limitation parameters as shown below:

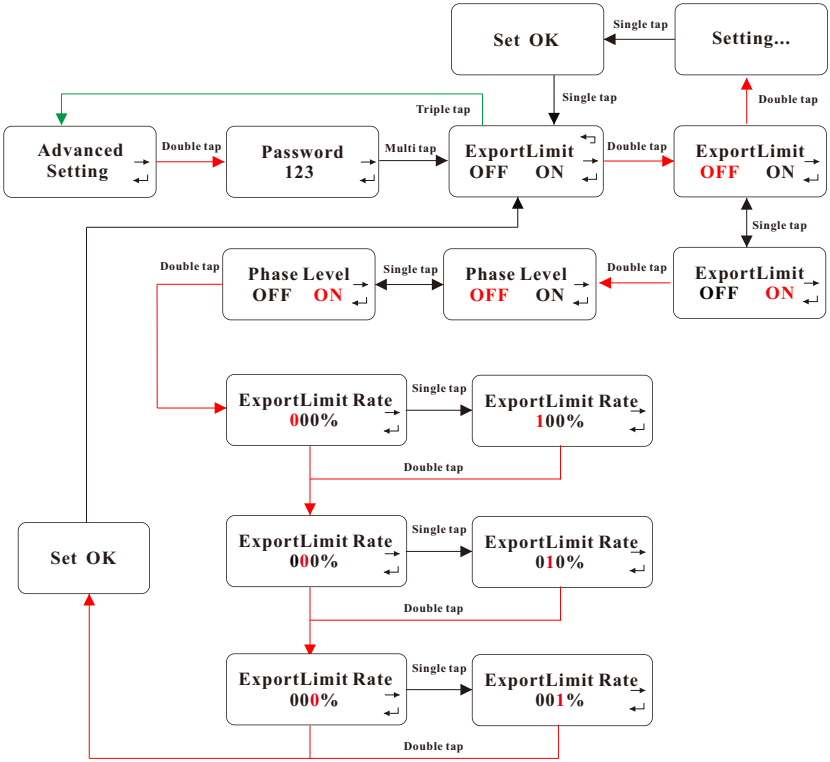

6.7 Setting the off-grid function

Working with the battery and the backup box, the MOD TL3-XH inverter can operate in backup mode to supply power to loads when the grid fails. The maximum output power is the inverter's rated power. You can configure the output voltage (set to 230V/400V by default) and the output frequency (set to 50Hz by default) for the backup mode. If the backup mode is disabled (the inverter stops power output when the grid is lost), you can enable the backup mode on the OLED screen. Single tap to view the options or increase the number by one; double tap to confirm your setting. Configure the backup mode as illustrated below:

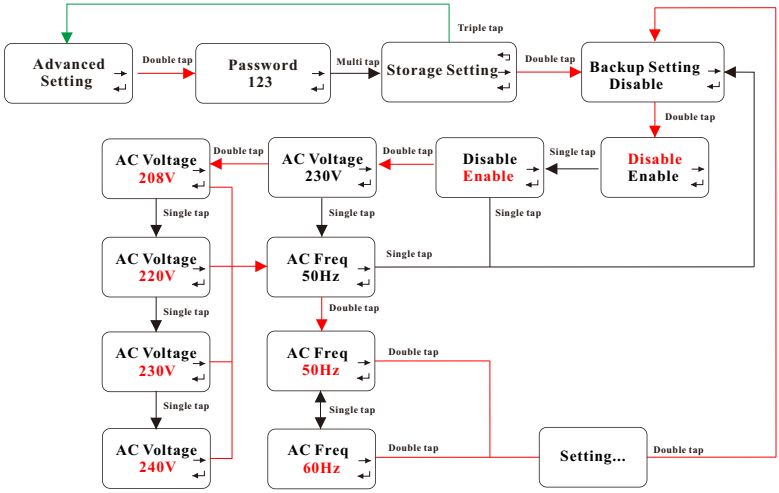

6.8 Setting the charge from grid function

When paired with compatible batteries, the MOD TL3-XH inverter can draw power from the grid to charge the battery. Users can enable the charge from grid function (set to disabled by default) on the OLED screen. Single tap to view the options; double tap to confirm your setting. Configure the charge from grid function as shown below:

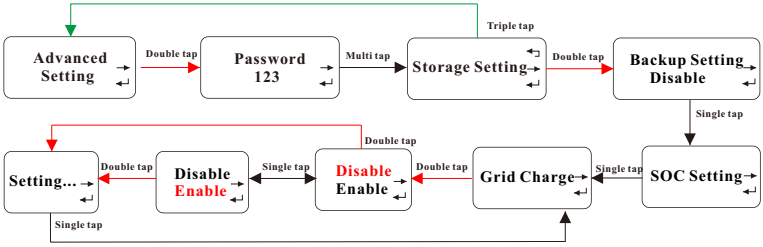

6.9 Restoring to factory settings

Information	• Be aware that with this operation, all parameters, except time and date, will be reset to default values.

Single tap to view the options available or increase the number by one; double tap to confirm your setting.

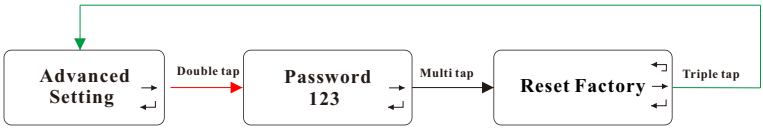

Commissioning 7

7.1 Checking before powering on the system

Table 7-1 Checking items

No.	Checking items	Criteria
1	Installation of the inverter	The inverter is securely installed
2	Cable layout	The communication cables and the power cables are separated
3	Grounding	The grounding cable is correctly and properly connected
4	Switch	The DC SWITCH and all other breakers connected to the inverter are OFF
5	Cable connection	The cables on the AC/PV/battery side are correctly and securely connected
6	Unused terminals & ports	All unused terminals and ports are sealed with waterproof caps
7	Installation environment	The installation environment meets all the requirements specified in this manual and ensure that the ventilation valve is not obstructed

7.2 Powering on the system

DANGER	• Wear insulated gloves and use insulated tools to avoid electric shocks or short-circuit accidents.
Note	• Before turning on the AC breaker, check if the AC voltage is within the permissible range using a multimeter.
Information	• After powering on the system, the OLED screen will display the error code/warning code when a fault/alarm occurs. For detailed troubleshooting suggestions, please see Section 12 Troubleshooting.

Step 1. If the inverter is connected to a battery, turn the DC SWITCH on the battery to ON.
Step 2. Set the DC SWITCH on the left side of the inverter to ON.
Step 3. Turn on the AC breaker between the inverter and the grid.
Step 4. Check the running status of the inverter by observing the OLED screen.
Step 5. Tap the touch button to view information concerning the inverter on the OLED screen.

7.3 Setting the country/region

Note	• For certain models, you need to set the country/area after powering on the system manually. • If a wrong country/area has been selected, you can reconfigure it in advanced settings. For details, refer to Section 6.4 Setting the country/area.

8 Functions

Information	**Note:** Setting the following parameters on the ShinePhone APP or the Server webpage requires the password. To access the password, please contact Growatt service personnel.

8.1 Setting the export limitation

WARNING	• To enable export limitation, a smart meter is required. Please select the meter recommended above; otherwise, the communication protocol may be mismatched. • Please ensure that all cables are correctly connected and the Export Limitation is enabled.

8.1.1 On the OLED screen

For details, please see Section 6.6 Setting the export limitation parameters.

8.1.2 On the ShinePhone APP

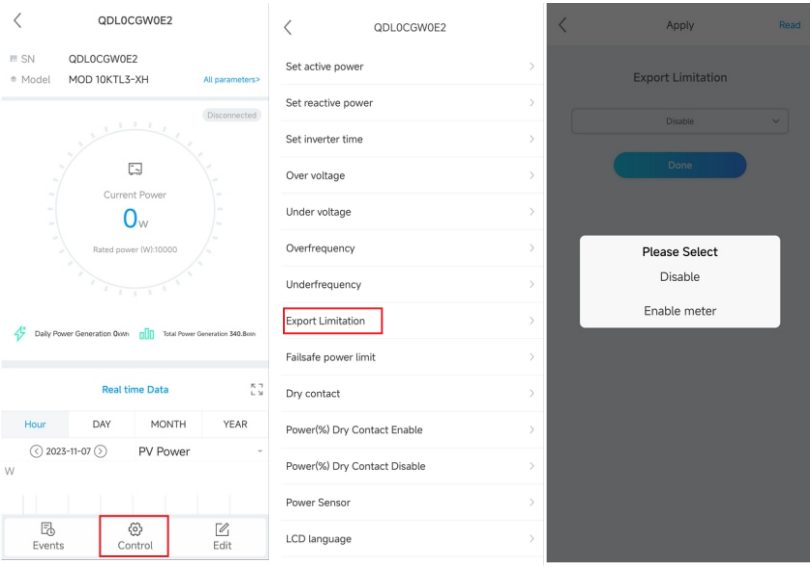

8.1.3 On the Server webpage

Step1. Log in with your Server account

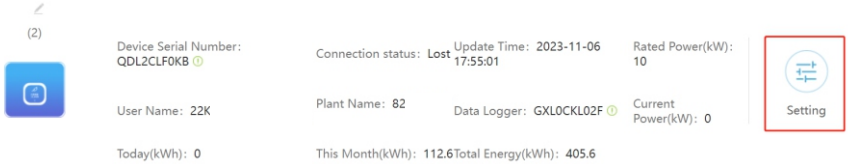

Step2. Setting > Export limit setting > Enable > Set the Phase level

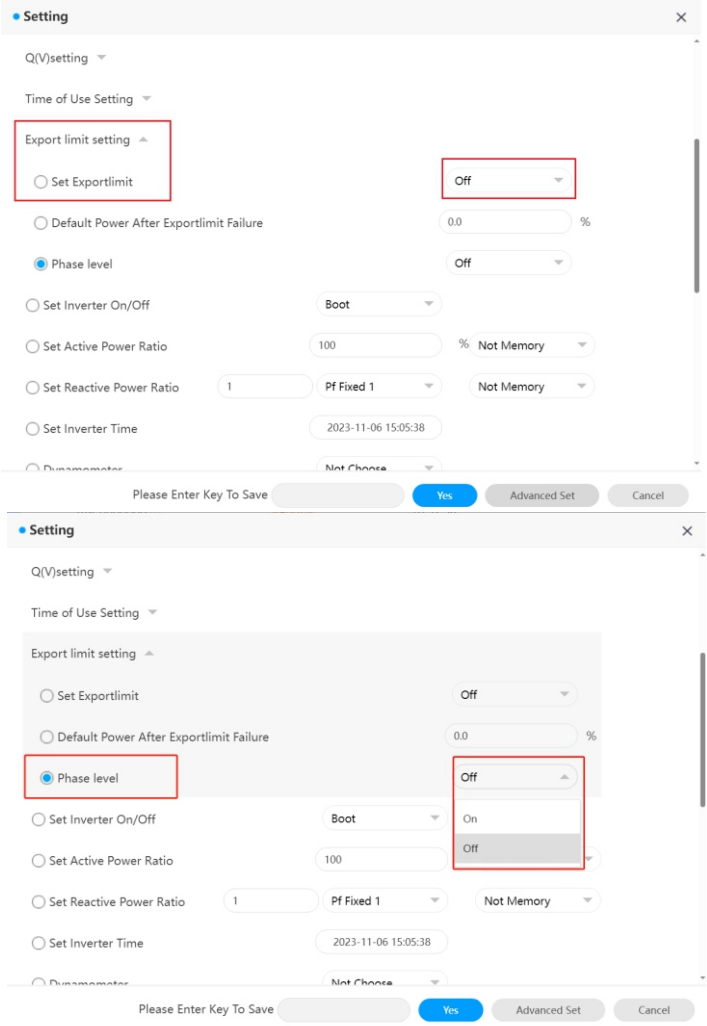

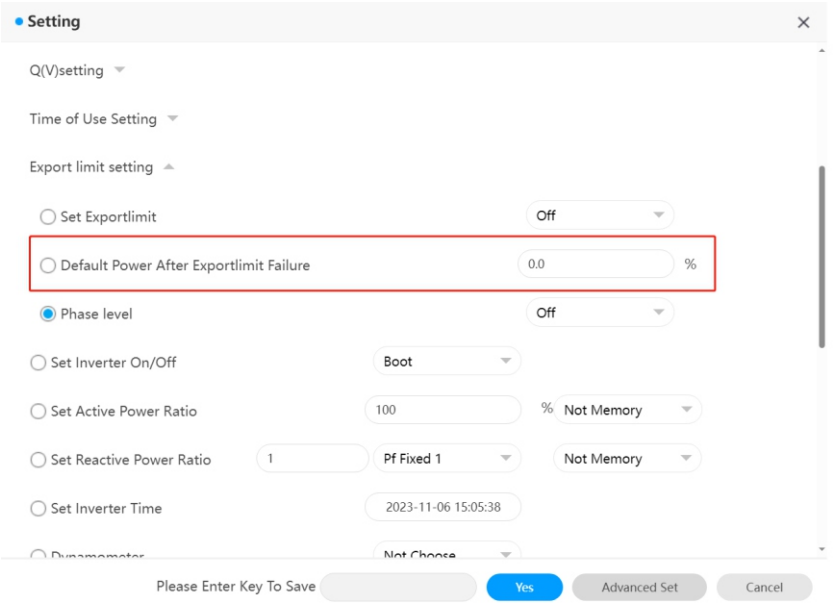

8.2 DRMs & Remote logic control

CAUTION	• Make sure the cable glands have been tightened firmly. • If the cable glands are not mounted properly, the inverter can be destroyed due to moisture and dust penetration. In this case, all the warranties shall be void.
WARNING	• Excessively high voltage can damage the inverter! • External voltage supplying to the DRM PORT should not exceed +5V.

8.2.1 Demand Response Modes (for AU & NZ only)

Information	• DRMs application description: Applicable to AS/NZS4777.2.2020 DRM0, DRM1, DRM2, DRM3, DRM4, DRM5, DRM6, DRM7, DRM8 are available. • The DRED (Demand Response Enabling Device) is a power grid dispatch device.

8.2.1.1 Method of asserting demand response modes

Figure 8-1 DRMs wiring diagram

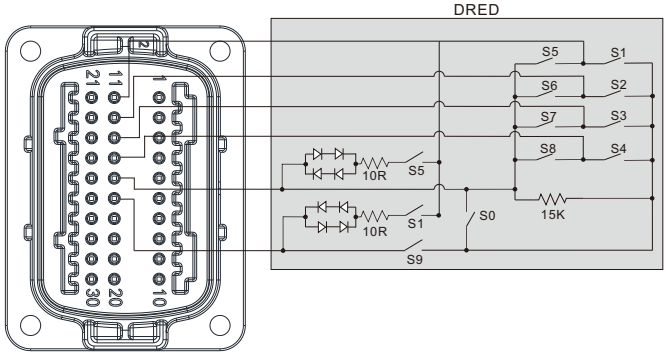

Table 8-1 DRMs function description

PIN	Mode	Switches on DRED		Function
16	DRM 0	S0	S9	When switches S0 and S9 are turned on, the inverter will shut down When switch S0 is turned off and S9 is turned on, the inverter will be grid-tied
11	DRM 1	S1	S9	Do not consume power
12	DRM 2	S2	S9	Do not consume at more than 50% of rated power
13	DRM 3	S3	S9	Do not consume at more than 75% of rated power
14	DRM 4	S4	S9	Increase power consumption
11	DRM 5	S5	S9	Do not generate power
12	DRM 6	S6	S9	Do not generate at more than 50% of rated power
13	DRM 7	S7	S9	Do not generate at more than 75% of rated power and sink reactive power if capable
14	DRM 8	S8	S9	Increase power generation (subject to constraints from other active DRMs)

8.2.2 Active power control with a RRCR (for EU models)

Figure 8-2 System diagram with the RRCR

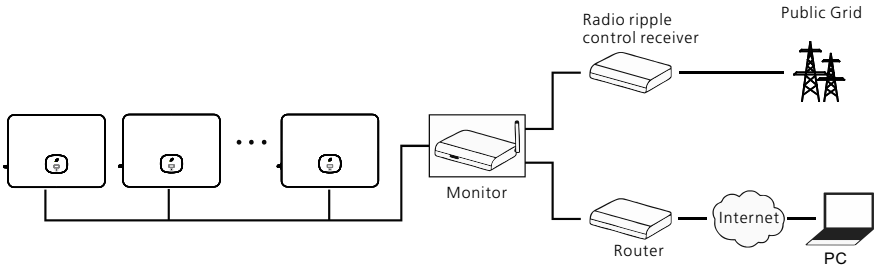

8.2.2.1 The following table illustrates the pin assignment and function:

Figure 8-3 RRCR wiring diagram

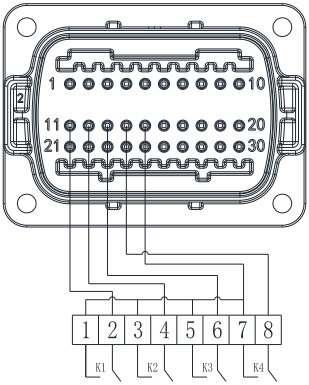

connect to RRCR

Table 8-2 RRCR wiring description

DRM Socket Pin NO.	Description	Connected to RRCR
11	Relay contact 1 input	K1 – Relay 1 output
12	Relay contact 2 input	K2 – Relay 2 output
13	Relay contact 3 input	K3 – Relay 3 output
14	Relay contact 4 input	K4 – Relay 4 output
15	GND	Relay's common node

8.2.2.2 The inverter is preconfigured to the following RRCR power levels:

Table 8-3 Power regulation description

DRM Socket Pin 11	DRM Socket Pin 12	DRM Socket Pin 13	DRM Socket Pin 14	Active power	Cos(φ)
Shorting with Pin 15				0%	1
	Shorting with Pin 15			30%	1
		Shorting with Pin 15		60%	1
			Shorting with Pin 15	100%	1

Active power control and reactive power control are enabled separately.

8.3 Setting the dry contact

8.3.1 On the Server webpage

Step 1. Log in with your Server account

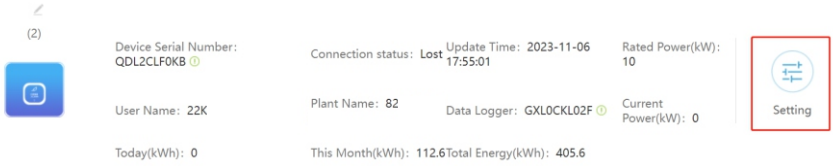

Step 2. Setting > Dry Function > Dry Contact Function > On > Yes

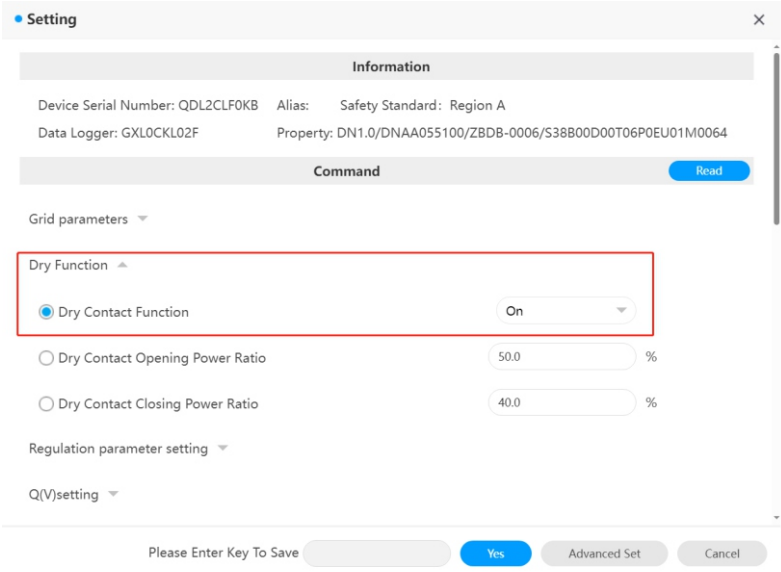

Step 3. Set the dry contact opening/closing power

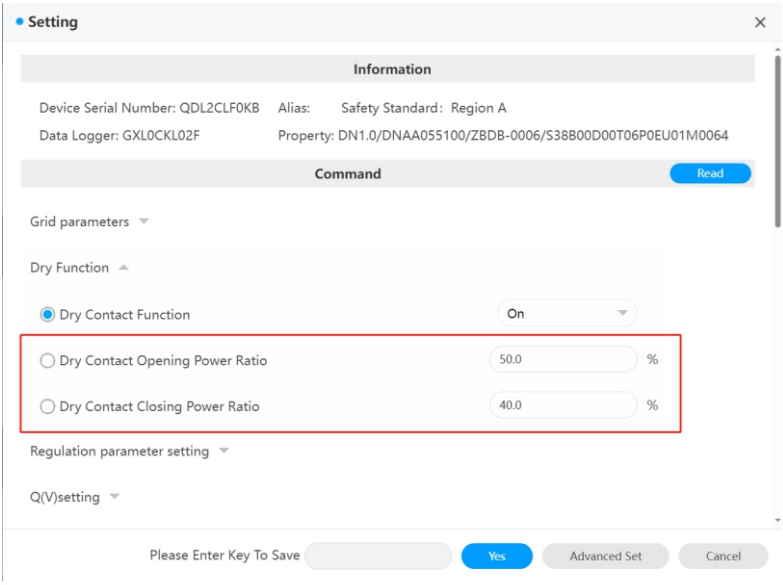

8.3.2 On the ShinePhone APP

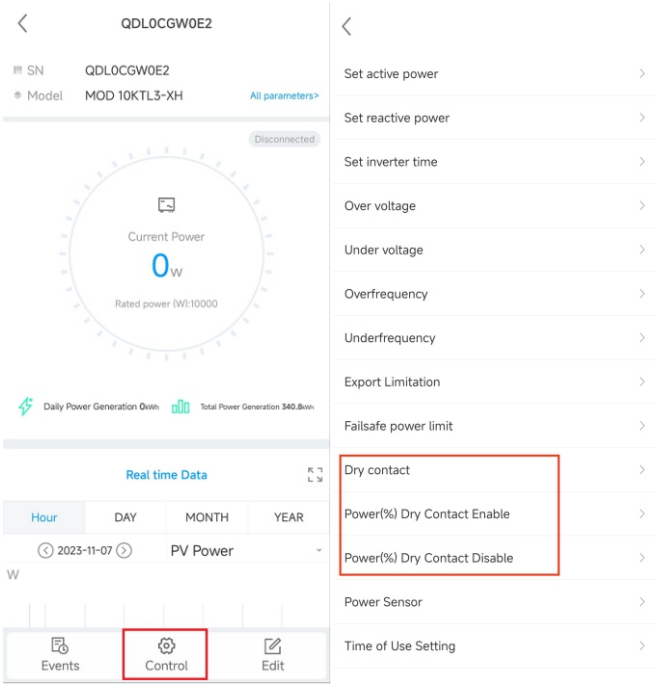

8.4 Setting the operating modes

WARNING	• The time periods should not overlap; otherwise, the configuration would fail. • After setting the parameters, please verify that the parameter changes have been successfully adopted.

8.4.1 On the Server webpage

Step 1. Log in with your Server account
Step 2. The time segments are illustrated below, which will only be displayed if a battery is connected.

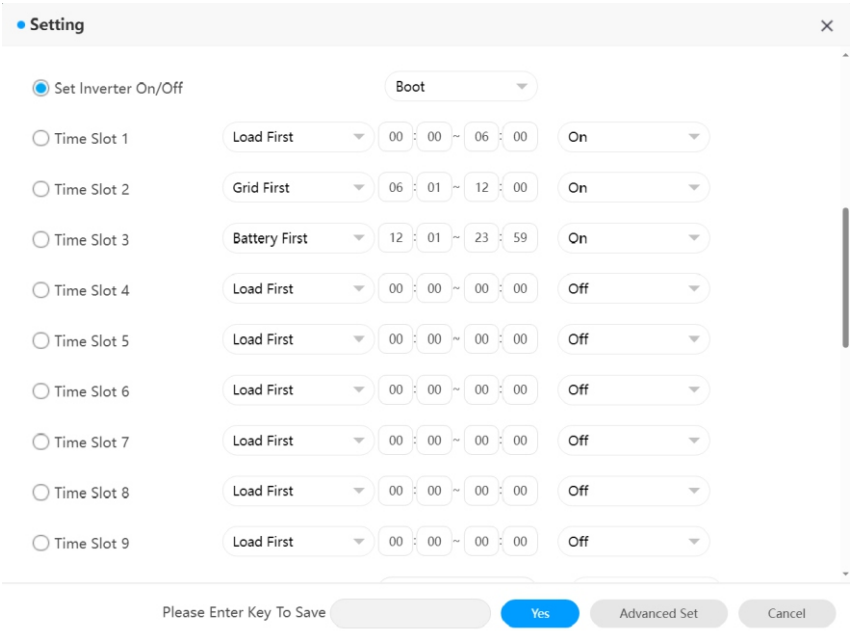

Step 3. Set the operating mode for a specific time segment
Select the specific time segment > select the operating mode > set the start & end time > select "On".

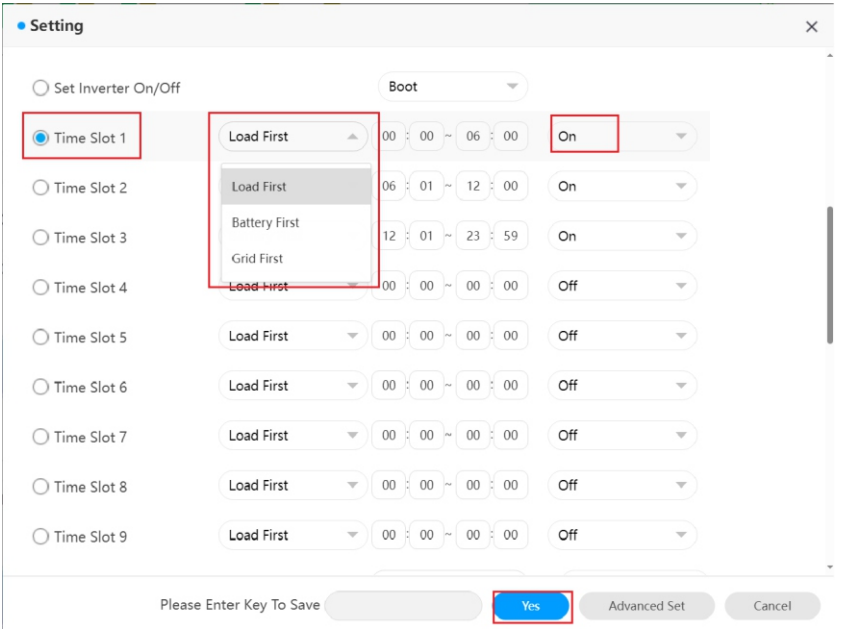

Step 4. Setting other time segments
Follow the operations described above to configure other time segments.

8.4.2 On the ShinePhone APP

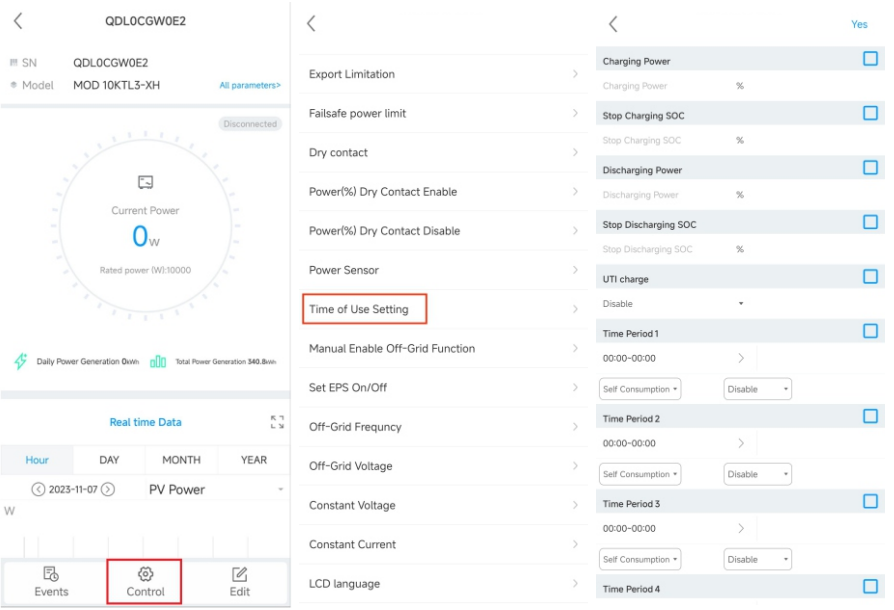

8.5 Backup function (optional)

DANGER	• When wiring the SYN, please refer to the silk screen inside the box; otherwise, the device might be damaged. Growatt shall not be liable for device damage caused by incorrect wiring. • The bypass breaker and the circuit breaker of the inverter cannot be turned on at the same time as it might result in device damage, for which Growatt shall not be liable.

8.5.1 Setting the off-grid function on the OLED screen

For details, refer to Section 6.8 Setting the off-grid function

8.5.2 Setting the off-grid function on the Server webpage

Step 1. Log in with your Server account, select the target inverter and click "Setting".
Step 2. Select off-grid function setting > Set Backup On/Off > On > Yes.

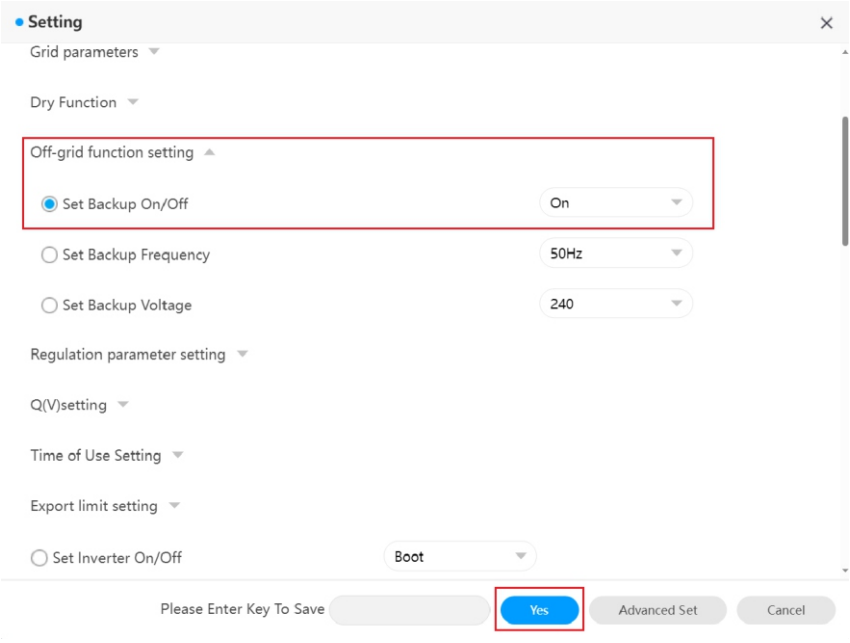

8.5.3 Setting the off-grid function on the ShinePhone APP

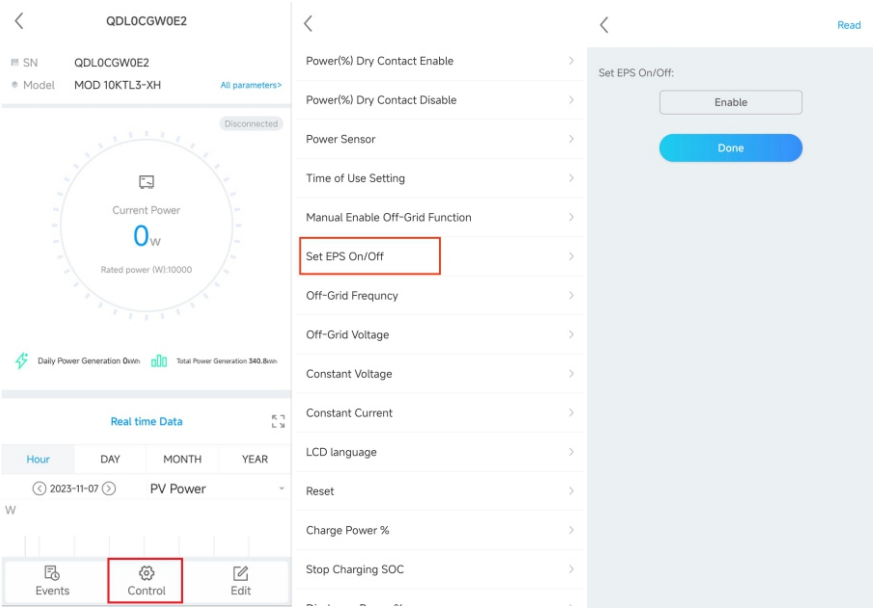

8.6 AFCI

8.6.1 Enabling the AFCI function

8.6.1.1 On the Server webpage

Step 1. Log in with your Server account, then click "Setting".
Step 2. Select Regulation parameter setting > AFCI On > On > Yes.

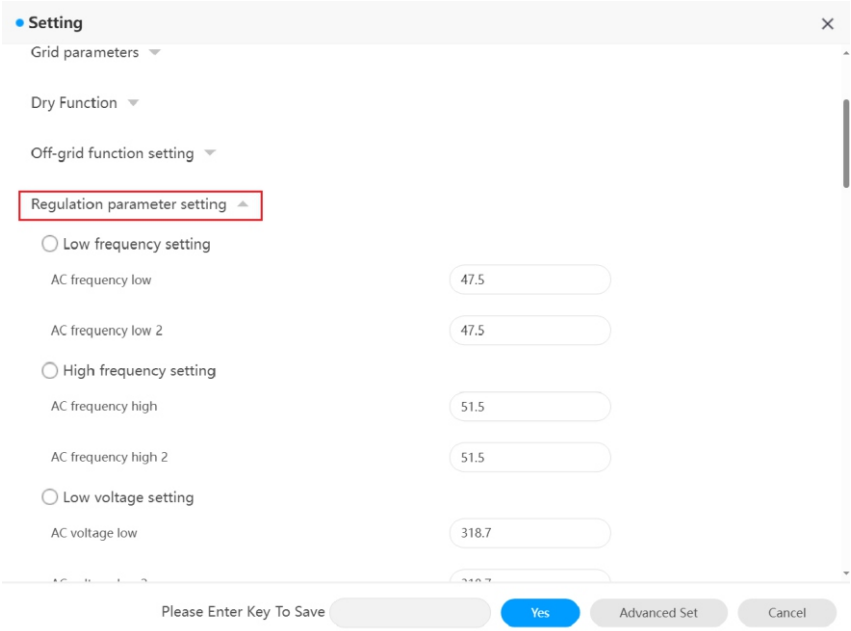
Setting
Grid parameters
Dry Function
Off-grid function setting
Regulation parameter setting
Low frequency setting
AC frequency low
47.5
AC frequency low 2
47.5
High frequency setting
AC frequency high
51.5
AC frequency high 2
51.5
Low voltage setting
AC voltage low
318.7
Please Enter Key To Save
Yes
Advanced Set
Cancel

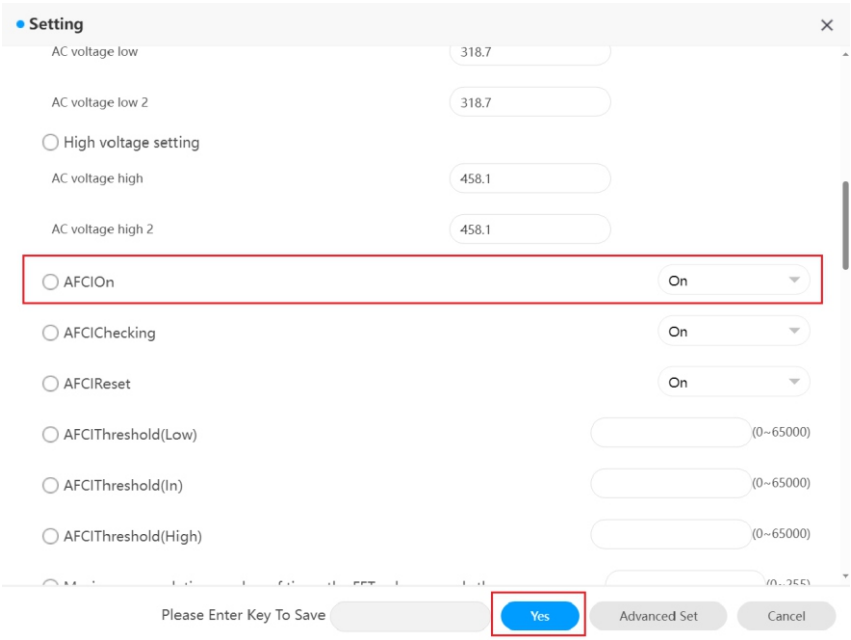
Setting
AC voltage low
318.7
AC voltage low 2
318.7
High voltage setting
AC voltage high
458.1
AC voltage high 2
458.1
AFCIOn
On
AFCIChecking
On
AFCIReset
On
AFCIThreshold(Low)
(0~65000)
AFCIThreshold(In)
(0~65000)
AFCIThreshold(High)
(0~65000)
Please Enter Key To Save
Yes
Advanced Set
Cancel

8.6.1.2 On the ShinePhone APP

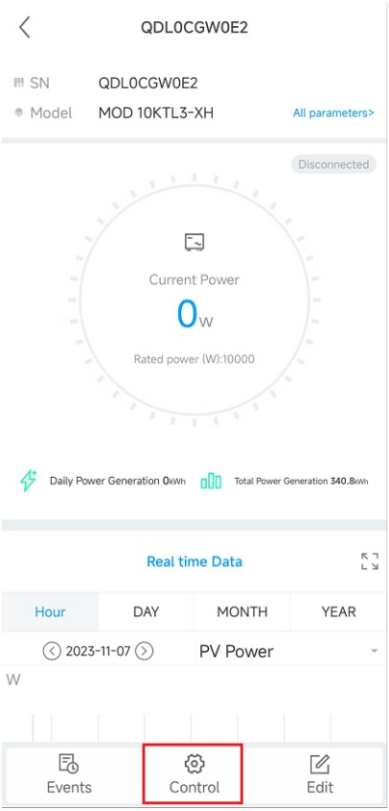

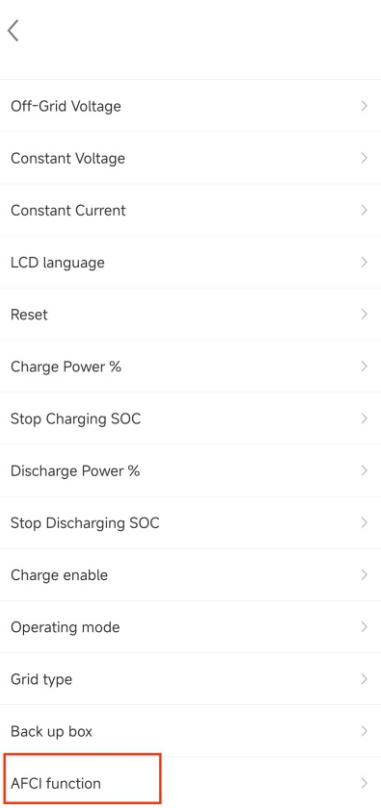

8.6.2 Clearing the fault

If "Error 200" is displayed, it indicates that an arc fault has been detected in the PV system. The AFCI will be triggered, and the inverter will be powered off. The inverter has large electrical potential differences between its conductors. Arc flashes can occur through air when high-voltage current flows. Do not work on the product during operation. When the inverter reports Error 200, please proceed as follows:

Step 1. Shut down the system
Disconnect the DC SWITCH on the inverter, the AC breaker and the DC SWITCH on the battery.
Step 2. Check the PV system
Check if the PV voltage is within the permissible range.
Check if the PV terminals are securely in place.
Check if any cable is damaged.
Step 3. Restart the system
Check the system to ensure that no error is found, then proceed to restart the system.

8.7 Setting the COM address of the inverter

For details about setting COM address on the OLED display, please see Section 6.3 Setting the communication address.

8.8 Power de-rating for voltage variation (Volt-Watt mode)

The inverter regulates the output power based on the AC grid voltage. This feature is enabled by default and is considered an advanced function. If you need to modify this setting, please contact the after-sales O&M team for assistance.

8.9 Reactive power regulation for voltage variation (Volt-VAR mode)

The inverter adjusts the input/output power in response to changes of the AC grid voltage. This feature is disabled by default and is considered an advanced function. If you need to modify this setting, please contact the after-sales O&M team for assistance.

9 System maintenance

To ensure the long-term and reliable operation of the system, it is recommended to perform maintenance on a regular basis as instructed in this section.

DANGER	• If the inverter is connected to a DC/DC high-voltage controller and the off-grid mode is enabled, disconnect the AC circuit breaker between the inverter and the grid, the inverter will output 230/240V voltage in the off-grid mode. Before maintaining the system, ensure that the DC SWITCH on the DC/DC high voltage controller is set to OFF.
5min	• After the system is powered off, there may still be residual electricity and heat in the inverter, which could lead to electric shock or burns. Wait 5 minutes after turning off the system and wear protective gloves before performing any operations on the inverter.

9.1 Powering off the system

Follow these steps to power off the system:

Step 1. Turn off the AC breaker between the inverter and the grid.

Step 2. Set the DC SWITCH on the inverter to OFF.

Step 3. If there is a DC breaker between the inverter and the PV string, disconnect the DC breaker.

Step 4. If the inverter is connected to a battery, set the DC SWITCH on the battery to OFF.

9.2 Checking items and Maintenance frequency

Checking item	Checking content	Interval
Cleaning	• Check if the heat sink and the fan are obstructed or blocked by dust periodically.	Once a year
Operation status	• Check if the inverter's exterior is damaged or deformed. • Check for any abnormal sounds during operation.	Every six months
	• Check the operating status of the system on the APP.	Regularly
Cable connection	• Check if any cable is in poor contact or loose connection. • Examine cables for any damage. • Check for melting at terminal connections	Every six months
Grounding	• Verify if the grounding cable is securely connected.	Every six months
Sealing	• Inspect the sealing of all terminals and interfaces.	Every six months
Environment	• Inspect and clear any weeds around the inverter before they wither.	Once a year

Decommissioning 10

10.1 Removing the inverter

- Disconnect all electrical connections from the inverter, including the RS485 communication cable, DC input cables, AC output cables, battery cables, and the grounding cable.
- Remove the inverter from the mounting bracket.
- Take away the mounting bracket.

10.2 Packing the inverter

- If the original package is available, please place the inverter in the original box and tie it with tapes.
- If the original package is not available, please put the inverter in a carton box that is suitable for its dimensions and weight.

10.3 Storing the inverter

Store the inverter in a dry place and keep the temperature between -25℃ and 60℃.

10.4 Disposing of the inverter

	Do not dispose of the product together with the household waste but in accordance with the disposal regulations for electronic waste applicable at the installation site.

11 Specification

11.1 MOD TL3-XH series

Model / Specifications	MOD 3000TL3-XH	MOD 4000TL3-XH	MOD 5000TL3-XH	MOD 6000TL3-XH
Input data (DC)				
Recommended Max. PV power (for module STC)	6000W	8000W	10000W	12000W
Max. DC voltage	1100V			
Startup voltage	160V			
Full power voltage range	160V~850V			
Nominal voltage	600V			
MPPT voltage range	140V-1000V			
No. of MPPT trackers	2			
No. of PV strings per MPPT tracker	1/1	1/1	1/1	1/1
Max. input current per MPPT tracker	16A/16A	16A/16A	16A/16A	16A/16A
Max. short-circuit current per MPPT tracker	20A		20A	
Backfeed current to PV array	0A			
DC Battery				
Compatible battery (only)	ARX-XH HV Battery (7.68kWh~25.6kWh)			
Operating voltage range	600 V ~ 950V			
Max. operating current	11A			
Max. discharge power	3300W	4400W	5500W	6600W
Max. charge power	6000W			
Output data (On-gird)				
Nominal AC power	3000W	4000W	5000W	6000W
Max. AC apparent power	3300VA	4400VA	5500VA	6600VA
Nominal AC voltage/range	230/400V			
AC grid frequency/range	50/60 Hz 45~55Hz/55-65 Hz			
Max. output current	5.0A	6.7A	8.3A	10.0A
AC inrush current	30A			
Max. output fault current	26.7A			

Specifications \ Model	MOD 3000TL3-XH	MOD 4000TL3-XH	MOD 5000TL3-XH	MOD 6000TL3-XH
Max. output overcurrent Protection	26.7A			
Power factor(@nominal power)	>0.99			
THDi	<3%			
AC grid connection type	3W+N+PE			
Efficiency				
Max. efficiency	98.3%			
Euro-eta	97.50%			
Protection devices				
DC reverse-polarity protection	YES			
DC switch	YES			
DC surge protection	YES			
Insulation resistance monitoring	YES			
AC surge protection	YES			
AC short-circuit protection	YES			
Grid monitoring	YES			
Anti-islanding protection	YES			
Residual-current monitoring unit	YES			
String fuse protection	NO			
String monitoring	YES			
AFCI protection	Configurable			
General data				
Dimensions (W / H / D) in mm	425*387*147mm			
Weight	13kg			
Operating temperature range	-25°C ... +60°C (>45°C Derating)			
Noise emission (typical)	≤29dB(A)			
Altitude	3000m			
Internal consumption at night	<5.5W			

General data	
Topology	Transformerless
Cooling	Natural heat dissipation
IP rating	IP66
Relative humidity	0~100%
DC connection	H4/MC4 (OPT)
AC connection	quick-connector terminal
Interfaces	
Display	OLED+LED
USB/RS485	YES
WIFI/GPRS/4G/RF/LAN	OPT

Model / Specifications	MOD 7000TL3-XH	MOD 8000TL3-XH	MOD 9000TL3-XH	MOD 10KTL3-XH
Input data (DC)				
Recommended Max. PV power (for module STC)	14000W	16000W	18000W	20000W
Max. DC voltage	1100V			
Start voltage	160V			
Full power voltage range	160V~850V	250V~850V	282V~850V	313V~850V
Nominal voltage	600V			
MPPT voltage range	140V-1000V			
No. of MPPT trackers	2			
No. of PV strings per MPPT tracker	1/1	1/1	1/1	1/1
Max. input current per MPPT tracker	16A/16A	16A/16A	16A/16A	16A/16A
Max. short-circuit current per MPPT tracker	20A		20A	
Backfeed current to PV array	0A			
DC Battery				
Compatible battery (only)	ARK-XH HV Battery (7.68kWh~25.6kWh)			
Operating voltage range	600 V ~ 950 V			
Max. operating current	18.5A			
Max. discharge power	7700W	8800W	9900W	11kW
Max. charge power	10kW			
Qutput data (on-grid)				
Nominal AC power	7000W	8000W	9000W	10kW
Max. AC apparent power	7700VA	8800VA	9900VA	11kVA
Nominal AC voltage/range	230/400V			
AC grid frequency/range	50/60 Hz 45~55Hz/55-65 Hz			
Max. output current	11.7A	13.3A	15.0A	16.7A
AC inrush current	30A			
Max. output fault current	42.7A			
Max. output overcurrent Protection	42.7A			

Specifications \ Model	MOD 7000TL3-XH	MOD 8000TL3-XH	MOD 9000TL3-XH	MOD 10KTL3-XH
Power factor(@nominal power)	>0.99			
THDi	<3%			
AC grid connection type	3W+N+PE			
Efficiency				
Max. efficiency	98.6%			
Euro-eta	98.10%			
Protection devices				
DC reverse-polarity protection	YES			
DC switch	YES			
DC surge protection	YES			
Insulation resistance monitoring	YES			
AC surge protection	YES			
AC short-circuit protection	YES			
Grid monitoring	YES			
Anti-islanding protection	YES			
Residual-current monitoring unit	YES			
String fuse protection	NO			
String monitoring	YES			
AFCI protection	Configurable			
General data				
Dimensions (W / H / D) in mm	425*387*147mm			
Weight	14kg			
Operating temperature range	-25°C ... +60°C (>45°C Derating)			
Noise emission (typical)	≤29dB(A)			
Altitude	3000m			
Internal consumption at night	<5.5W			

Model / Specifications	MOD 7000TL3-XH	MOD 8000TL3-XH	MOD 9000TL3-XH	MOD 10KTL3-XH
Topology	Transformerless			
Cooling	Natural heat dissipation			
IP rating	IP66			
Relative humidity	0~100%			
DC connection	H4/MC4 (OPT)			
AC connection	quick-connector terminal			
Interfaces				
Display	OLED+LED			
USB/RS485	YES			
WIFI/GPRS/4G/RF/LAN	OPT			

11.2 MOD TL3-XH(BP) series

Model / Specifications	MOD 3000TL3-XH	MOD 4000TL3-XH	MOD 5000TL3-XH	MOD 6000TL3-XH
Input data (DC)				
Recommended Max. PV power (for module STC)	6000W	8000W	10000W	12000W
Max. DC voltage	1100V			
Startup voltage	160V			
Full power voltage range	160V~850V			
Nominal voltage	600V			
MPPT voltage range	140V-1000V			
No. of MPPT trackers	2			
No. of PV strings per MPPT tracker	1/1	1/1	1/1	1/1
Max. input current per MPPT tracker	16A/16A	16A/16A	16A/16A	16A/16A
Max. short-circuit current per MPPT tracker	20A		20A	
Backfeed current to PV array	0A			
DC Battery				
Compatible battery (only)	APX HV Battery (5kWh~60kWh)			
Operating voltage range	600 V ~ 950V			
Max. operating current	15A	20A	25A	
Max. discharge power	3300W	4400W	5500W	6600W
Max. charge power	9000W	12kW	15kW	
Output data (On-gird)				
Nominal AC power	3000W	4000W	5000W	6000W
Max. AC apparent power	3300VA	4400VA	5500VA	6600VA
Nominal AC voltage/range	230/400V			
AC grid frequency/range	50/60 Hz 45~55Hz/55-65 Hz			
Max. output current	5.0A	6.7A	8.3A	10.0A
AC inrush current	30A			
Max. output fault current	26.7A			

Model / Specifications	MOD 3000TL3-XH	MOD 4000TL3-XH	MOD 5000TL3-XH	MOD 6000TL3-XH
Max. output overcurrent Protection	26.7A			
Power factor(@nominal power)	>0.99			
THDi	<3%			
AC grid connection type	3W+N+PE			
Efficiency				
Max. efficiency	98.3%			
Euro-eta	97.50%			
Output data (Backup)				
Nominal output power	3000W	4000W	5000W	6000W
Max. apparent power	3000VA	4000VA	5000VA	6000VA
Max. output power of single phase	1000W	1330W	1660W	2000W
Nominal AC output voltage	230V/400V			
Nominal AC output frequency	50Hz			
Max. output current	4.6A	6.1A	7.6A	9.1A
Power factor	0.8 leading to 0.8 lagging			
THDv	THDv≤2%@Rload, THDv≤5%@RCDload			
DCV	≤300mV AVG			
Switch time	<500ms			
Protection devices				
DC reverse-polarity protection	YES			
DC switch	YES			
DC surge protection	YES			
Insulation resistance monitoring	YES			
AC surge protection	YES			
AC short-circuit protection	YES			
Grid monitoring	YES			
Anti-islanding protection	YES			

Model / Specifications	MOD 3000TL3-XH	MOD 4000TL3-XH	MOD 5000TL3-XH	MOD 6000TL3-XH
Residual-current monitoring unit	YES			
String fuse protection	NO			
String monitoring	YES			
AFCI protection	Configurable			
General data				
Dimensions (W / H / D) in mm	425*387*147mm			
Weight	13kg			
Operating temperature range	-25°C ... +60°C (>45°C Derating)			
Noise emission (typical)	≤29dB(A)			
Altitude	3000m			
Internal consumption at night	<5.5W			
Topology	Transformerless			
Cooling	Natural heat dissipation			
IP rating	IP66			
Relative humidity	0~100%			
DC connection	H4/MC4 (OPT)			
AC connection	quick-connector terminal			
Interfaces				
Display	OLED+LED			
USB/RS485	YES			
WIFI/GPRS/4G/RF/LAN	OPT			

Model / Specifications	MOD 7000TL3-XH	MOD 8000TL3-XH	MOD 9000TL3-XH	MOD 10KTL3-XH
Input data (DC)				
Recommended Max. PV power (for module STC)	14000W	16000W	18000W	20000W
Max. DC voltage	1100V			
Start voltage	160V			
Full power voltage range	160V~850V	250V~850V	282V~850V	313V~850V
Nominal voltage	600V			
MPPT voltage range	140V-1000V			
No. of MPPT trackers	2			
No. of PV strings per MPPT tracker	1/1	1/1	1/1	1/1
Max. input current per MPPT tracker	16A/16A	16A/16A	16A/16A	16A/16A
Max. short-circuit current per MPPT tracker	20A		20A	
Backfeed current to PV array	0A			
DC Battery				
Compatible battery (only)	APX HV Battery (5kWh~60kWh)			
Operating voltage range	600 V ~ 950 V			
Max. operating current	25A/25A			
Max. discharge power	7700W	8800W	9900W	11kW
Max. charge power	15kW			
Qutput data (on-grid)				
Nominal AC power	7000W	8000W	9000W	10kW
Max. AC apparent power	7700VA	8800VA	9900VA	11kVA
Nominal AC voltage/range	230/400V			
AC grid frequency/range	50/60 Hz 45~55Hz/55-65 Hz			
Max. output current	11.7A	13.3A	15.0A	16.7A
AC inrush current	30A			
Max. output fault current	42.7A			
Max. output overcurrent Protection	42.7A			

Model / Specifications	MOD 7000TL3-XH	MOD 8000TL3-XH	MOD 9000TL3-XH	MOD 10KTL3-XH
Power factor(@nominal power)	>0.99			
THDi	<3%			
AC grid connection type	3W+N+PE			
Efficiency				
Max. efficiency	98.6%			
Euro-eta	98.10%			
Output data (Backup)				
Nominal output power	7000W	8000W	9000W	10kW
Max. apparent power	7000VA	8000VA	9000VA	10kVA
Max. output power of single phase	2330W	2660W	3000W	3330W
Nominal AC output voltage	230V/400V			
Nominal AC output frequency	50Hz			
Max. output current	10.7A	12.2A	13.7A	15.2A
Power factor	0.8 leading to 0.8 lagging			
THDv	THDv≤2%@Rload, THDv≤5%@RCDload			
DCV	≤300mV AVG			
Switch time	<500ms			
Protection devices				
DC reverse-polarity protection	YES			
DC switch	YES			
DC surge protection	YES			
Insulation resistance monitoring	YES			
AC surge protection	YES			
AC short-circuit protection	YES			
Grid monitoring	YES			
Anti-islanding protection	YES			
Residual-current monitoring unit	YES			

Model / Specifications	MOD 7000TL3-XH	MOD 8000TL3-XH	MOD 9000TL3-XH	MOD 10KTL3-XH
String fuse protection	NO			
String monitoring	YES			
AFCI protection	Configurable			
General data				
Dimensions (W / H / D) in mm	425*387*147mm			
Weight	14kg			
Operating temperature range	-25°C ... +60°C (>45°C Derating)			
Noise emission (typical)	≤29dB(A)			
Altitude	3000m			
Internal consumption at night	<5.5W			
Topology	Transformerless			
Cooling	Natural heat dissipation			
IP rating	IP66			
Relative humidity	0~100%			
DC connection	H4/MC4 (OPT)			
AC connection	quick-connector terminal			
Interfaces				
Display	OLED+LED			
USB/RS485	YES			
WIFI/GPRS/4G/RF/LAN	OPT			

12 Troubleshooting

An error message will be displayed on the OLED screen and the LED indicator will turn red when a fault occurs, indicating that a system fault or an inverter fault has occurred. In some cases, you may need to contact Growatt for technical assistance.

12.1 System alarm

12.1.1 Inverter alarm

Warning message	Description	Troubleshooting
Warning 200	PV string fault	1. Check if the PV panels are normal after shutdown. 2. If the error message persists, contact Growatt support.
Warning 201	PV string/PID quick-connect terminals abnormal	1. Check the wiring of the string terminals after shutdown. 2. If the error message persists, contact Growatt support.
Warning 202	DC SPD function abnormal	1. Check the DC SPD after shutdown. 2. If the error message persists, please contact Growatt support.
Warning 203	Pv1 or PV2 short circuited	1. Check if PV1 or PV2 is short circuited. 2. If the error message persists, contact Growatt support.
Warning 204	Dry contact function abnormal	1. Check the wiring of the dry contact after shutdown. 2. If the error message persists, contact Growatt support.
Warning 205	PV boost driver abnormal	1. Restart the inverter. 2. If the error message persists, contact Growatt support.
Warning 206	AC SPD function abnormal	1. Check the AC SPD after shutdown. 2. If the error message persists, contact Growatt support.
Warning 207	USB flash drive overcurrent protection	1. Unplug the USB flash drive. 2. Plug in the USB flash drive again after shutdown. 3. If the error message persists, contact Growatt support.
Warning 208	DC fuse blown	1. Check the fuse after shutdown. 2. If the error message persists, contact Growatt support.
Warning 209	DC input voltage exceeds the upper threshold	1. Turn off the DC switch immediately and check the DC voltage. 2. If the DC voltage is within the specified range and the error message persists, contact Growatt support.
Warning 210	PV wiring abnormal	1. Check the polarity of the PV terminals. 2. If the error message persists, contact Growatt support.

Warning message	Description	Troubleshooting
Warning 217	BDC abnormal	1. Restart the inverter. 2. If the error message persists, contact Growatt support.
Warning 218	BDC Bus disconnected	1. Restart the inverter. 2. If the error message persists, contact Growatt support.
Warning 219	PID function abnormal	1. Restart the inverter. 2. If the error message persists, contact Growatt support.
Warning 220	PV string disconnected	1. Check if the PV string is properly connected. 2. If the error message persists, contact Growatt support.
Warning 221	PV string current unbalanced	1. Check if the PV panels of the corresponding string are normal. 2. If the error message persists, contact Growatt support.
Warning 300	No utility grid connected or utility grid power failure	1. Check if the grid is down. 2. If the error message persists, contact Growatt support.
Warning 301	Grid voltage is beyond the permissible range	1. Check if the grid voltage is within the specified range. 2. If the error message persists, contact Growatt support.
Warning 302	Grid frequency is beyond the permissible range	1. Check if the grid frequency is within the specified range. 2. If the error message persists, contact Growatt support.
Warning 303	Off-grid mode, overload	1. Please reduce the load connected to the off-grid output terminal. 2. If the error message persists, contact Growatt support.
Warning 400	Fan failure	1. Check if the fan is properly connected after shutdown. 2. If the error message persists, contact Growatt support.
Warning 401	Meter abnormal	1. Check if the meter is turned on. 2. If the meter is correctly connected to the inverter.
Warning 406	Boost circuit malfunction	1. Restart the inverter. 2. If the error message persists, contact Growatt support.

Warning message	Description	Troubleshooting
Warning 407	Over-temperature	1. Restart the inverter. 2. If the error message persists, contact Growatt support.
Warning 408	NTC temperature sensor is broken	1. Restart the inverter. 2. If the error message persists, contact Growatt support.
Warning 409	Reactive power scheduling communication failure	1. Check if ShineMaster is turned on. 2. If the error message persists, contact Growatt support.
Warning 411	Sync signal abnormal	1. Check if the sync cable is abnormal. 2. If the error message persists, contact Growatt support.
Warning 600	DC component excessively high in output current	1. Check if the sync cable is abnormal. 2. If the error message persists, contact Growatt support.
Warning 601	DC component excessively high in output voltage	1. Restart the inverter. 2. If the error message persists, contact Growatt support.
Warning 602	Off-grid output voltage too low	1. Restart the inverter. 2. If the error message persists, contact Growatt support.
Warning 603	Off-grid output voltage too high	1. Restart the inverter. 2. If the error message persists, contact Growatt support.
Warning 604	Off-grid output overcurrent	1. Check if the load power exceeds the specification limit. 2. Restart the inverter. If the error message persists, contact Growatt support.
Warning 605	Off-grid bus voltage too low	1. Check if the load power exceeds the specification limit. 2. Restart the inverter. If the error message persists, contact Growatt support.
Warning 606	Off-grid output overloaded	1. Check if the load power exceeds the specification limit. 2. Restart the inverter. If the error message persists, contact Growatt support.

Warning message	Description	Troubleshooting
Warning 607	Communicatio n with the backup box is abnormal	1. Check the communication wiring of the backup box after powering off the device. 2. If the error message persists, contact Growatt support.
Warning 608	Backup box is abnormal	1. Restart the inverter. 2. If the error message persists, contact Growatt support.
Warning 609	Balanced circuit abnormal	1. Restart the inverter. 2. If the error message persists, contact Growatt support.

12.1.2 Battery alarm

Error code	Description	Troubleshooting
Battery Warning 404(0)	Abnormal EEPROM	Please contact Growatt support.
Battery Warning 410(0)	External oscillation abnormal	1. Restart the machine. 2. If the fault message still exists, contact the manufacturer.
Battery Warning 410(1)	Oscillation abnormal	1. Restart the machine. 2. If the fault message still exists, contact the manufacturer.
Battery Warning 410(2)	USB communication abnormal	1. Restart the machine, and replace the USB flash drive. 2. If the fault message still exists, contact the manufacturer.
Battery Warning 411(6)	Parallel communication failed	1. Power off the machine and check the communication cables between PM and PM, then restart the machine. 2. If the fault message still exists, contact the manufacturer.
Battery Warning 417(2)	BM and PM software version mismatched	1. BM and PM will automatically update to the matched software version (takes about 30 minutes). 2. If the fault message still exists, contact the manufacturer.
Battery Warning 431(0)	BOOT abnormal	1. Restart the machine. 2. If the fault message still exists, contact the manufacturer.
Battery Warning 500(0)	Abnormal CAN communication during parallel operation	1. Power off the machine and check the communication cables between PM and PM, then restart the machine. 2. If the fault message still exists, contact the manufacturer.
Battery Warning 500(7)	BM went offline	1. Power off the machine and check the communication cables between BM and BM, then restart the machine. 2. If the fault message still exists, contact the manufacturer.

Error code	Description	Troubleshooting
Battery Warning 500(9)	Abnormal communication with PM	1. Power off the machine and check the communication cables between BM and BM, then restart the machine. 2. If the fault message still exists, contact the manufacturer.
Battery Warning 701(0)	Battery not discharging alarm	The battery SOC reaches the preset discharge cutoff SOC. Therefore, the battery is not allowed to discharge.
Battery Warning 702(0)	Forced charge is required	The battery SOC is lower than the preset discharge cutoff SOC. Therefore, forced charge is required.
Battery Warning 703(0)	Battery is fully charged	The battery SOC reaches the preset charge cutoff SOC. Therefore, the battery is not allowed to be charged.
Battery Warning 704(0)	PM to INV overvoltage	1. Power off the machine and check the power cables between PM and INV, then restart the machine. 2. If the fault message still exists, contact the manufacturer.
Battery Warning 705(0)	PM to INV overvoltage	1. Power off the machine and check the power cables between PM and INV, then restart the machine. 2. If the fault message still exists, contact the manufacturer.
Battery Warning 707(0)	Discharge Overload Alarm	1. Reduce the load power, then restart the machine. 2. If the fault message still exists, contact the manufacturer.
Battery Warning 708(0)	Discharge Overload Anomaly	1. Reduce the load power, then restart the machine. 2. If the fault message still exists, contact the manufacturer.

12.2 System fault

12.2.1 Inverter fault

Error code	Description	Troubleshooting
Error 200	DC arc fault has been detected	1. After shutdown, check the connection of the PV string. 2. Restart the inverter. 3. If the error message persists, please contact Growatt support.
Error 201	An excessively high leakage current has been detected	1. Restart the inverter. 2. If the error message persists, please contact Growatt support.
Error 202	PV input voltage exceeds the upper threshold	1. Disconnect the DC switch immediately and check the voltage. 2. If the PV input voltage is within the permissible range and the error message persists, please contact Growatt support.
Error 203	V panels have low insulation resistance	1. Check if the PV strings are properly grounded. 2. If the error message persists, please contact Growatt support.
Error 204	PV string reversely connected	1. After shutdown, check if the PV string is reversely connected to the inverter. 2. Restart the inverter. 3. If the error message persists, please contact Growatt support.
Error 300	Grid voltage is beyond the permissible range	1. Check the grid voltage. 2. If the grid voltage is within the permissible range and the error message persists, please contact Growatt support.
Error 301	AC terminals reversed	1. Check the connection of the AC output terminals. 2.If the error message persists, please contact Growatt support.
Error 302	No utility grid connected or utility grid power failure	1. After shutdown, check the AC wiring. 2. If the error message persists, please contact Growatt support.
Error 304	Grid frequency is beyond the permissible range	1. Check the grid frequency and restart the inverter. 2. If the error message persists, please contact Growatt support.

Error code	Description	Troubleshooting
Error 305	Overload	1. Check if the load exceeds the output power upper limit; if so, please reduce the load. 2. If the error message persists, please contact Growatt support.
Error 309	ROCOF Fault	1. Check the grid frequency and restart the inverter. 2. If the error message persists, please contact Growatt support.
Error 311	Export limitation fail-safe	1. After shutdown, check the connection of the CT and the meter. 2. If the error message persists, please contact Growatt support.
Error 401	High DC component in output voltage	1. Restart the inverter. 2. If the error message persists, contact Growatt support.
Error 402	High DC component in output current	1. Restart the inverter. 2. If the error message persists, contact Growatt support.
Error 403	Output current unbalanced	1. Check if the output current is balanced after shutdown. 2. If the error message persists, contact Growatt support.
Error 404	Bus voltage sampling abnormal	1. Restart the inverter. 2. If the error message persists, please contact Growatt support.
Error 405	Relay fault	1. Restart the inverter. 2. If the error message persists, please contact Growatt support.
Error 407	Auto-test failed	1. Restart the inverter. 2. If the error message persists, please contact Growatt support.
Error 408	Over-temperature	1. After shutdown, check the temperature of the inverter and restart the inverter after the temperature is within the acceptable range. 2. If the error message persists, please contact Growatt support.
Error 409	Bus voltage abnormal	1. Restart the inverter. 2. If the error message persists, please contact Growatt support.

Error code	Description	Troubleshooting
Error 411	Internal communication failure	1. Check the wiring of the communication board after shutdown. 2. If the error message persists, please contact Growatt support.
Error 412	Temperature sensor disconnected	1. Check if the temperature sensor module is properly connected. 2. If the error message persists, please contact Growatt support.Growatt support.
Error 416	DC/AC overcurrent protection	1. Restart the inverter. 2. If the error message persists, please contact Growatt support.
Error 420	GFCI module abnormal	1. Check the GFCI module after shutdown. 2. If the error message persists, please contact Growatt support.
Error 424	INV current waveform abnormal	1. Restart the inverter. 2. If the error message persists, please contact Growatt support.
Error 425	AFCI self-test failure	1. Restart the inverter. 2. If the error message persists, please contact Growatt support.
Error 426	PV current sampling abnormal	1. Restart the inverter. 2. If the error message persists, please contact Growatt support.
Error 427	AC current sampling abnormal	1. Restart the inverter. 2. If the error message persists, please contact Growatt support.
Error 428	BOOST short-circuited	Please contact Growatt support.
Error 429	BUS soft start failed	1. Restart the inverter. 2. If the error message persists, please contact Growatt support.
Error 600	Off-grid output short-circuited	1. Restart the inverter. 2. If the error message persists, please contact Growatt support.
Error 601	Off-grid Bus Volt Low	1. Check if the battery is working properly or the battery experiences capacity loss. 2. If the error message persists, please contact Growatt support.

Error code	Description	Troubleshooting
Error 602	Abnormal Volt at the off-grid terminal	1. Check if the battery is working properly or the battery experiences capacity loss. 2. If the error message persists, please contact Growatt support.
Error 603	Soft start failed	1. Restart the machine. 2. If the fault message still exists, contact the manufacturer.
Error 604	Off-grid output voltage abnormal	1. Restart the inverter. 2. If the error message persists, please contact Growatt support.
Error 605	Balanced circuit self-test failed	1. Restart the inverter. 2. If the error message persists, please contact Growatt support.
Error 606	High DC component in output voltage	1. Restart the inverter. 2. If the error message persists, please contact Growatt support.
Error 607	Off-grid output overload	1. Restart the inverter. 2. If the error message persists, please contact Growatt support.
Error 608	Off-grid parallel signal abnormal	1. Check if the communication cables are properly connected. 2. If the error message persists, please contact Growatt support.
Error 609	Backup box is not detected	1. After shutdown, check the signal wiring for identifying the backup box. 2. If the error message persists, please contact Growatt support.Growatt support.
Error 610	Off-grid split-phase voltage abnormal	1. Power off the system and check if the backup box split-phase transformer and the control relay are abnormal. 2. Restart the system. 3. If the error message persists, please contact Growatt support.Growatt support.
Error 700	Abnormal communication between the backup box and the inverter	1. Power off the system and check if the backup box split-phase transformer and the control relay are abnormal. 2. Restart the system. 3. If the error message persists, please contact Growatt support.

Error code	Description	Troubleshooting
Error 701	Backup box grid-side relay failure	1. Check if the communication cable between the inverter and the backup box is properly connected. 2. If the error message persists, please contact Growatt support.
Error 703	Backup box on-grid overload	1. Restart the backup box. 2. If the error message persists, please contact Growatt support.
Error 705	Overheat inside the backup box	1. Reduce the load. 2. If the error message persists, please contact Growatt support.

12.2.2 Battery fault

Error code	Description	Troubleshooting
Battery Error 404(0)	BM to PM undervoltage	1. Power off the machine and check the power cables, then restart the machine. 2. If the fault message still exists, contact the manufacturer.
Battery Error 406(0)	BM to PM transient overvoltage	1. Power off the machine and check the power cables, then restart the machine. 2. If the fault message still exists, contact the manufacturer.
Battery Error 407(0)	BM to PM open circuitedBM	1. Power off the machine and check the power cables, then restart the machine. 2. If the fault message still exists, contact the manufacturer.
Battery Error 408(0)	Over-Temp	1. Power off the machine and wait for 30 minutes before you restart the machine. 2. If the fault message still exists, contact the manufacturer.
Battery Error 409(2)	PM to INV transient overvoltage	1. Restart the machine. 2. If the fault message still exists, contact the manufacturer.
Battery Error 411(0)	Abnormal communication with INV	1. Power off the machine and check the communication cables between PM and INV, then restart the machine. 2. If the fault message still exists, contact the manufacturer.
Battery Error 411(1)	Abnormal serial communication with the master control chip	1. Power off the machine and check the communication cables between PM and PM, then restart the machine. 2. If the fault message still exists, contact the manufacturer.
Battery Error 411(2)	Abnormal communication with INV	1. Power off the machine and check the communication cables between PM and PM, then restart the machine. 2. If the fault message still exists, contact the manufacturer.
Battery Error 411(5)	Abnormal communication with BM	1. Power off the machine and check the communication cables between PM and PM, then restart the machine. 2. If the fault message still exists, contact the manufacturer.

Error code	Description	Troubleshooting
Battery Error 411(7)	Multiple Masters parallel communication failure	1. Power off the machine and check the communication cables between PM and INV, then restart the machine. 2. If the fault message still exists, contact the manufacturer.
Battery Error 416(1)	Transient overvoltage/ overcurrent	1. Power off the machine and check the power cables, then restart the machine. 2. If the fault message still exists, contact the manufacturer.
Battery Error 416(2)	Transient overcurrent	1. Power off the machine and check the power cables, then restart the machine. 2. If the fault message still exists, contact the manufacturer.
Battery Error 416(4)	BM to PM overcurrent	1. Power off the machine and check the power cables, then restart the machine. 2. If the fault message still exists, contact the manufacturer.
Battery Error 417(0)	Mismatched MODEL of software/ hardware	Please contact Growatt support.
Battery Error 419(5)	software version Inconsistent hardware/	Please contact Growatt support.
Battery Error 500(3)	CAN parallel connection failed	1. Power off the machine and check the communication cables between PM and PM, then restart the machine. 2. If the fault message still exists, contact the manufacturer.
Battery Error 505(0)	PM to INV voltage calibration failed	1.Power off the machine and check the power cables between PM and INV, then restart the machine. 2. If the fault message still exists, contact the manufacturer.
Battery Error 506(1)	PM circuit breaker open-circuited	1. Power off the machine and check the insulation breaker, then restart the machine. 2. If the error message persists, please contact Growatt support.

Error code	Description	Troubleshooting
Battery Error 506(2)	PM fuse open circuited	Please contact Growatt support.
Battery Error 506(3)	PM to INV short circuited (power cables reversed)	1.Power off the machine and check the power cables between PM and INV, then restart the machine. 2.If the fault message persists, contact the manufacturer.
Battery Error 508(3)	Transient overvoltage	1. Power off the machine and check the power cables, then restart the machine. 2. If the fault message still exists, contact the manufacturer.
Battery Error 603(0)	PM to INV voltage soft start failed	1.Power off the machine and check the power cables between PM and INV, then restart the machine. 2.If the fault message persists, contact the manufacturer.
Battery Error 700(0)	Temperature sensor open-circuited	1.When the temperature of the machine is close to - 40°C (-40°F), it will raise this alarm. 2.If the temperature is higher than -40°C(-40°F) when this alarm is reported, please contact Growatt support.
Battery Error 707(0)	Overload fault	1. Reduce the load power, then restart the machine. 2. If the problem persists, please contact Growatt support.
Battery Error 707(2)	Overload fault	1. Reduce the load power, then restart the machine. 2. If the problem persists, please contact Growatt support.

13 EU Declaration of conformity

Within the scope of EU directives:
•2014/35/EU Low Voltage Directive (LVD)
•2014/30/EU Electromagnetic Compatibility Directive (EMC)
•2011/65/EU RoHS Directive and its amendment (EU)2015/863
Shenzhen Growatt New Energy Co. Ltd confirms that the Growatt inverters and accessories described in this document are in compliance with the above-mentioned EU directives. The entire EU Declaration of Conformity can be found at www.ginverter.com.

14 Certificate of Compliance

Growatt confirms herewith that the products, when correctly configured, are in compliance with the requirements specified in the following standards and directives (dated: Apr./2023):

Model	Certificates
MOD 3-6KTL3-XH MOD 7-10KTL3-XH	CE, IEC 62109, INMETRO, AS 4777.2, EN50549, N4105, C10/11

15 Contact us

If you have technical problems concerning our products, please contact Growatt Service at +86 755 2747 1942. To provide you with the necessary support, please have the following information ready:

Serial Number	Format: LSLxxxxxx
Model	SxxBxxDxxTxxPxxUxxMxxxx
Error message	Error xxx
Grid voltage	xxx V
DC input voltage	xxx V
Can you reproduce the problem?	Yes or No
Has it occurred before?	Yes or No
What were the environmental conditions like when the problem occurred?	

Information about the PV panels

Manufacturer name and model number of the PV panel	xxx
Output power of the panel	xx kW
Voc of the panel	xxx V
Vmp of the panel	xxx V
Imp of the panel	xx A
The number of panels in each string	xx pcs.

Shenzhen Growatt New Energy Co., Ltd.

4-13/F, Building A, Sino-German (Europe) Industrial Park,
Hangcheng Ave, Bao'an District, Shenzhen, China

T +86 755 2747 1942
E service@ginverter.com
W www.ginverter.com

Download Manual

Growatt New Energy

Shenzhen Growatt New Energy Co., Ltd.
4-13/F, Building A, Sino-German (Europe) Industrial Park,
Hangcheng Ave, Bao'an District, Shenzhen, China

T +86 755 2747 1942
E service@ginverter.com
W www.ginverter.com

GR-UM-246-A-04 (PN: 044.0094104)